WOODARD &CURRAN

Tillson District Infrastructure Plan

STATE OF MAINE
BARRY S. SHEFF
No. 9708
LICENSED
PROFESSIONAL ENGINEER
MARCH 22, 2011

222218.00
City of Rockland
Rockland, ME
March 2011

woodardcurran.com
COMMITMENT & INTEGRITY DRIVE RESULTS

TABLE OF CONTENTS

SECTION **PAGE NO.**

Executive Summary **1**

1. INTRODUCTION **2**

1.1 Utility Infrastructure 2

2. SANITARY SEWER **4**

2.1 Introduction 4
2.2 Data Collection and Mapping 4
2.3 Existing Sanitary Sewer Evaluation 5
2.4 Proposed Wastewater Flows 13
2.5 Proposed Sanitary Sewer System 15

3. STORMDRAIN SYSTEM **18**

3.1 Introduction 18
3.2 Data Collection and Mapping 18
3.3 Existing Stormdrain Evaluation 18
3.4 Proposed Stormdrain System 19

4. WATER SYSTEM **23**

4.1 Introduction 23
4.2 Data Collection and Mapping 23
4.3 Existing Water System 23
4.4 New Flow Requirements 24
4.5 Proposed Water System 24

5. SIDEWALK **27**

5.1 Introduction 27
5.2 Existing Conditions 27
5.3 Recommendations 28

6. STREETS **43**

6.1 Introduction 43
6.2 Existing Conditions 43
6.3 Recommendations 44

7. PRIVATE UTILITIES **55**

7.1 Introduction 55
7.2 Central Maine Power 55
7.3 Fairpoint Communications 55
7.4 Time Warner Cable 55
7.5 Natural Gas 55
7.6 Recommendations 56

8. PHASING/COST ESTIMATES **57**

LIST OF TABLES

TABLE		PAGE NO.
Table 1:	Existing Tillson Sanitary Sewer	8
Table 2:	Photographs of Existing Tillson Sanitary Sewer Manhole	9
Table 3:	Existing Main Street Sanitary Sewer	11
Table 4:	Photographs of Main Street Sanitary Sewer Manholes	12
Table 5:	Typical Design Flows	13
Table 6:	Total Anticipated Residential Sanitary Sewer Flows	13
Table 7:	Total Anticipated Restaurant Sanitary Sewer Flows	14
Table 8:	Total Anticipated Retail Sanitary Sewer Flows (Option 1)	14
Table 9:	Total Anticipated Retail Sanitary Sewer Flows (Option 2)	14
Table 10:	Total Anticipated Office/Commercial Space Sanitary Sewer Flows	15
Table 11:	Total Anticipated Sanitary Sewer Flow	15
Table 12:	Recommended Pipe Slopes and Capacities	16
Table 13:	25-Year Storm Rainfall Intensities	19
Table 14:	Main Street Catch Basins in Poor Condition	21
Table 15:	Historical Flow Data for Tillson Avenue Area	23
Table 16:	Total Anticipated Potable Water Flow	24
Table 17:	Existing Sidewalk Conditions	31
Table18:	Existing Sidewalk Condition Photographs	35
Table 19:	Existing Street Conditions	47
Table 20:	Existing Street Condition Photographs	49

LIST OF FIGURES

FIGURE		PAGE NO.
Figure 1:	Study Area	3
Figure 2:	Existing Tillson Sanitary Sewer and Stormdrain Infrastructure	7
Figure 3:	Proposed Infrastructure	17
Figure 4:	Proposed Infrastructure	22
Figure 5:	Existing Water Infrastructure	25
Figure 6:	Proposed Infrastructure	26
Figure 7:	Main Street Sidewalk Improvements	28
Figure 8:	Existing Sidewalk Infrastructure	30
Figure 9:	Existing Street Infrastructure	46

EXECUTIVE SUMMARY

Woodard & Curran was retained by the City of Rockland to prepare this 2011 Tillson District Infrastructure Plan, as well as an accompanying Waterfront Area Redevelopment Plan, and a Downtown Revitalization Plan Update.

This 2011 Tillson District Infrastructure Plan (Infrastructure Plan) documents our assessment of existing public and private infrastructure condition and capacity; this Infrastructure Plan also lays out a framework for improvements to accommodate the Waterfront Area Redevelopment Plan, bound under separate cover. This Plan establishes a baseline understanding of the conditions and a vision for the future in the Tillson waterfront area, including locations of new and existing streets, recommended technical specifications for utilities and streetscapes, and the supporting utility infrastructure required for the envisioned redevelopment. In addition, the Infrastructure Plan provides a proposed phasing for the infrastructure construction within the study area, consistent with the Redevelopment Plan. Similar to the Redevelopment Plan, this Infrastructure Plan identifies a range of funding mechanisms available to the City for implementing the required infrastructure as well as the leveraging of public / private partnerships.

This Plan documents our work to develop the baseline conditions, including a representation of the input received at the time, as well as our observations and professional opinions. The extent to which the infrastructure implementation recommendations occur in accordance with this Plan, or the actual condition and capacity of the infrastructure items evaluated, may have changed since the time of our presentations and investigations.

1. INTRODUCTION

In 2008, the City of Rockland created the Tillson Redevelopment Tax Increment Financing (TIF) District. The City's goal in implementing this program was to create an incentive for redevelopment and revitalization of the Tillson Avenue area. With careful planning, the development of Tillson Avenue and the surrounding streets can become an extension of the thriving Main Street downtown area, providing a direct connection between the downtown area and the waterfront.

The physical connection between these areas depends significantly on the area's infrastructure – what can be reused, what needs to be replaced, and how the new and existing will knit together to create the desired end result. As part of the planning process and to ensure that the City gains the most benefit from the recently designated TIF district, the City contracted with Woodard & Curran and its subconsultants (MRLD, Inc.) to prepare this 2011 Tillson District Infrastructure Plan (Infrastructure Plan). The Infrastructure Plan is intended to provide the City guidance for improvements and technical recommendations for the study area.

Rockland, like many communities in Maine, recognizes the working waterfront is evolving and can contribute to the culture and economy in new ways. This evolution must be supported by appropriate design standards and infrastructure. The development of this plan took a systematic approach to determine the infrastructure needs for the district. The Plan was developed by first looking at the existing infrastructure; the location, condition and type of infrastructure was mapped and evaluated, and current capacities of the various infrastructure were analyzed.

The 2011 Waterfront Area Redevelopment Plan (Redevelopment Plan) was utilized to determine the build-out capacity of the area under current zoning. By using the Redevelopment Plan as a base, the necessary supporting infrastructure needs, including water, sewer, parking and municipal services were identified. Technical recommendations are presented in this Plan to support the Redevelopment Plan. These include layout considerations and technical design requirements for street and sidewalk systems; curb locations and materials; streetscape features; underground utility locations; and recommendations for utility changes. Potential phasing for improvements in the area have been considered and costs derived for the different development aspects. The goal of this Infrastructure Plan is to provide the City with a clear vision of necessary improvements and the associated costs.

1.1 UTILITY AND STREET INFRASTRUCTURE

As part of this effort, we completed a comprehensive investigation into the existing utility infrastructure within the study area (depicted in Figure 1). We completed a visual assessment of current conditions of street and sidewalk systems and made determinations of location, size, condition and capacity of the utilities. Underground and overhead utility systems were studied, including sanitary sewer, water, stormdrain, electric/power, telephone, internet, and cable television. The infrastructure analysis was broken into three tasks: Data collection and Mapping, Condition Assessment, and Capacity Analysis.

Figure 1: Study Area

Data collection work involved contacting each of the public and private utility companies in order to collect available data describing the infrastructure within the public right-of-Way. GIS data was obtained where possible including aerial photography, planimetric data, tax maps, parcel information, and zoning. As-built or design documents provided by the City for stormdrain and sanitary sewer utilities in the area supplemented the available GIS information. Based upon the available data, we compiled a series of utility infrastructure maps.

The maps were then used as a basis for the field condition assessment work. We inspected each of the manholes and catch basins within the Study Area to identify materials, type, size, and condition. All structures not included in the GIS, but located in the field, were identified and added to the GIS. In addition, we conducted field survey to accurately locate and establish rim elevations.

The data was then utilized to develop models (in Excel spreadsheet format) for the utilities within the Study Area. Sanitary sewer generation rates as well as water usage and demand rates were calculated and compared to the available capacity within the existing system. Deficiencies and the necessary adjustments to the existing system were identified in order to facilitate the proposed build-out. The future build-out scenario was also presented to the private utilities in order to gather any information they may offer that will facilitate the improvements.

2. SANITARY SEWER

2.1 INTRODUCTION

The City of Rockland has a combined (sanitary and stormdrain) sewer system in most areas of the City, including Main Street, and the Tillson Avenue wastewater pumping station. The Tillson Avenue area, however, consists primarily of a separated system. The combined and separated sanitary sewers transport wastewater to the City's Wastewater Treatment Facility, which is located on Lermond Cove within the Tillson District. The City's combined and separated stormdrain systems have combined sewer overflow (CSO) outfalls in multiple locations along the Rockland waterfront.

2.2 DATA COLLECTION AND MAPPING

The initial data set utilized for this Master Plan was developed based on the existing sanitary sewer and storm drain GIS data provided by the City of Rockland. The information was limited to the locations of manholes and catch basins based on existing planimetric data, and did not include the City's pipe network. To supplement the GIS data, the City provided engineering plans for Tillson Avenue; these plans depicted some of the infrastructure within Tillson Avenue and intersecting streets and were subsequently used to confirm the connectivity of pipes and structures that were observed in the field, as described below.

Field Investigation

In October 2009, we completed field assessments to collect data on the sanitary sewer and storm drain infrastructure on Main Street, Tillson Avenue, and the other public streets within the study area. We did not "enter" any structures to perform the work. The results of the field assessment are summarized herein. The goal was to collect information for structures including pipes, depths, and conditions as described in more detail below:

- Structure type – The observed structures and piping were distinguished as sanitary sewer, storm drain sewer, or combined sanitary and storm drain.
- Pipe size – The diameter (size) of pipes connecting to each structure was measured where possible. In some instances pipe size was impossible to collect; i.e. where a pipe was located very deep within a structure, interior of the pipe was not visible (apparent doghouse-style manhole installations), or there was high flow or submerged conditions within a pipe. In these instances, the pipe diameter could not be accurately measured and therefore the size was estimated, and in some cases confirmed by measurements at upstream or downstream structures, and by pipe sizes on plans provided by the City.
- Pipe material – As with pipe size, pipe material was sometimes obscured by the conditions within the structures. Some of this information was available in engineering drawings.
- Invert depths – Measurements of the distance from the structure's rim to pipe inverts were taken where possible.
- Flow condition – We noted problems with flow conditions due to blockage or damage, where observed.
- Structure condition – Damage of structures was noted where observed. The type of material used to construct the structures varied and was identified as well.
- Photographs – Photographs of each structure were taken to document condition.
- Connectivity – The apparent connectivity of the sanitary sewer and storm drain systems was developed based on field observations. In some cases, this could be confirmed based on available design plans.

We utilized the City's GIS maps as the initial basis for the field investigation; however, a number of structures were not included as part of the planimetric data; specifically we observed and assessed many more catch basins in the field, than were in the GIS. To supplement the GIS dataset, we performed ground survey upon completion of the field data collection efforts, to obtain exact locations of the newly identified structures. The survey also provided rim elevations of all manholes and catch basins observed as part of the field study for Tillson Avenue and Main Street.

2.3 EXISTING SANITARY SEWER EVALUATION

Sanitary Sewer Criteria

The separated sanitary sewer on Tillson Avenue and the combined sanitary sewer on Main Street were evaluated to determine their existing capacities. Manning's equation was used to calculate flow capacities for each pipe based on calculated pipe slopes, and observed pipe sizes and materials. Using the flow and the cross sectional areas of the pipes, we calculated velocity for each pipe. The adequacy of the existing pipes was evaluated based on *TR-16, Guides for the Design of Wastewater Treatment Works,* which recommends a minimum velocity of 2 fps for sanitary sewer pipe to prevent the settling of solids, and a maximum velocity of 10 fps to avoid scour.

Note that inverts, pipe sizes, pipe materials, and connectivity are approximate and based on our limited field work; prior to performing design, we recommend a comprehensive planimetric, utility and topographic survey be completed.

Tillson Avenue

Field observations and existing plans were used to determine connectivity along the main sanitary sewer line of Tillson Avenue, and to develop the pipe network. Figure 2 depicts the existing sanitary and storm sewer system on Tillson Avenue. We observed nineteen manhole structures in the Tillson Avenue right-of-way, and fifteen of these structures are part of the sanitary sewer network that will be impacted by the proposed redevelopment. In addition, two manholes on Lime Street, and two manholes on Wharf Street are connected to this network. Sanitary sewer manhole structure conditions, rim elevations, and invert elevations are included in Table 1. Photographs of each structure are provided in Table 2, where "structure names" correlate to structures listed in Table 1. These photographs depict the condition of each structure at the time of our field work.

Using sanitary sewer manhole rim elevations and measured inverts, we calculated sanitary sewer pipe slopes. Flow capacity and velocity was calculated for each pipe as previously described. The calculated slopes, velocities, and flows for sanitary sewer pipes on Tillson Avenue, Wharf Street and Lime Street are included.

Based on field observations of the sanitary sewer manholes, the sanitary sewer pipe in Tillson Avenue consists mainly of 8" PVC pipe which increases in size to 10" and 12" near the wastewater treatment facility. In some manholes, only the brick invert was readily visible, and the pipe material was not obvious. Engineering plans for the area identify much of the sanitary sewer pipe to be asbestos concrete. Without performing TV inspections of the entire sanitary sewer pipe network, it is unclear how much of the existing pipe is not asbestos concrete, and what the condition of this pipe is, so for the flow analysis, all of the pipe was assumed to be asbestos concrete, which has a higher Manning's coefficient than PVC, resulting in a smaller, more conservative flow capacity.

All of the gravity sanitary sewer pipes in this network are 8 inches in diameter. The calculated capacity varies from approximately 0.7 cubic feet per second (cfs) to 3 cfs, based on changes in slope. Calculated velocities in these pipes are approximately 2 feet per second (fps) to 9 fps. All pipe flows and velocities are included in Table 1.

The sanitary sewer network on the eastern end of Tillson Avenue drains by gravity to the Tillson Avenue pump station, which is connected by a forcemain to a downstream gravity sanitary sewer network in Tillson Avenue. Figure 22 shows the locations of these connections. Gravity sanitary sewer pipe sizes increase from 8" to 10" and 12", with

the largest pipes located at the entrance to the wastewater treatment plant. The maximum calculated flow through the 8 inch and 10 inch piping is maintained at approximately 1.6 cfs. This flow increases to 4 cfs, and eventually 7 cfs in the larger 12 inch pipe. Flow velocities in the 8" to 12" sanitary sewer pipes ranged from 3 fps up to 9 fps, providing adequate velocity to prevent solids deposition and avoid scour.

The City recently lined the gravity sewer on Tilson Avenue which eliminated a major portion of the extraneous flow to the Tillson Avenue Wastewater Pump Station. With the removal of the extraneous flow, the station does appear to have sufficient capacity for the current service area. The Tillson Avenue Wastewater Pump Station was designed and constructed in 1971 and has been operating since that time with no major modifications that we were made aware of. The pump station utilizes two 4-inch submersible pumps installed within a 6-foot diameter wetwell and does not have an emergency generator or alternate source to provide backup power. This station is 40 years old and has reached the end of its useful life and replacement should be considered as part of the Redevelopment Plan; the replacement of this Pump Station could represent $500,000 to $750,000 for total reconstruction. The Tillson Avenue pump station splits the sanitary sewer system into two separate gravity flow networks. The sanitary sewer network on the eastern end of Tillson Avenue includes five sanitary sewer manholes in Tillson Avenue and two in Wharf Street. The observed manholes were all constructed of precast concrete with brick inverts. The manholes were all in good condition, with some containing minor sedimentation. Sanitary sewer on private property beyond the ends of Tillson Avenue and Wharf Street were not included in our investigation.

Sanitary sewer from Lime Street connects into the Tillson Avenue sanitary sewer through 8 inch pipe. This sanitary sewer pipe has a calculated capacity of 0.5 cfs up to 1.2 cfs, matching the capacity on Tillson Avenue. The calculated velocities are 1.5 fps up to 3.5 fps. The velocity of 1.5 fps is lower than the recommended minimum, indicating that sedimentation may be occurring within the pipe, further reducing flow capacities. If the City finds evidence of decreased capacity in the sewers in this area of the district, a TV analysis of the pipes would provide more information on the extent of sedimentation.

Sanitary sewer on Tillson Avenue located between Main Street and the wastewater treatment plant was not investigated for flows. This sanitary sewer system connects to the wastewater treatment plant independently of the sanitary sewer networks described previously, and will not be affected by the proposed redevelopment on Tillson Avenue.

Figure 2: Existing Tillson Sanitary Sewer and Stormdrain Infrastructure

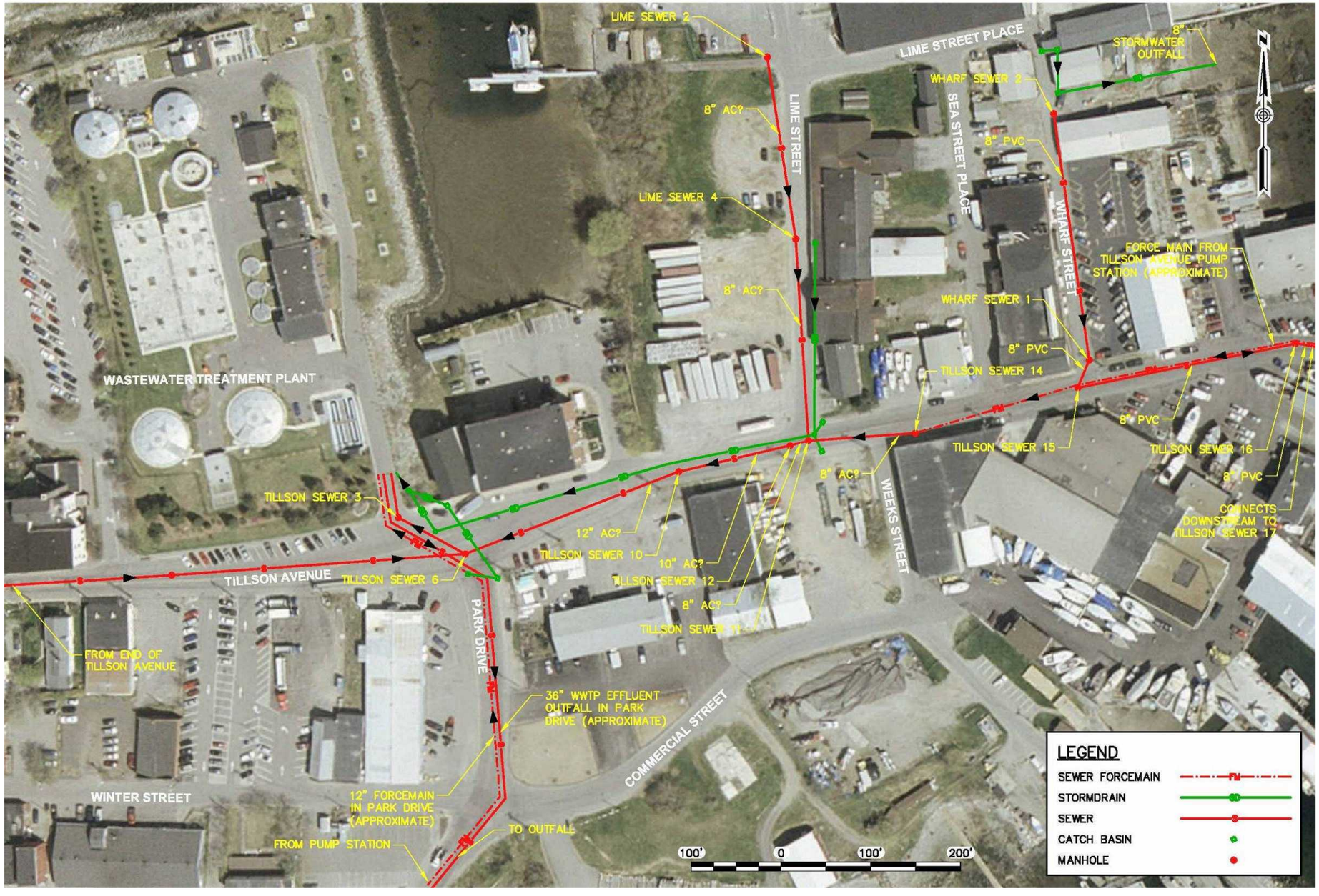

Table 1: Existing Tillson Sanitary Sewer

Upstream Structure	Structure Condition Comments	Rim Elevation (ft)	Invert Out (ft)	Downstream Structure	Invert In (ft)	Connecting Distance (ft)	Slope (ft/ft)	Pipe Diameter (in)	Pipe Area (ft^2)	Assumed Pipe Material for Calculation	Manning's "n"	Flow (cfs)	Velocity (ft/s)
tillson sewer 19	Concrete w/ brick invert; good condition	11.1	2.18	tillson sewer 18	2.28	52	0.0064	8	0.349	AC	0.013	0.97	2.77
tillson sewer 18	Concrete w/ brick invert; good condition	11.3	1.74	tillson sewer 17	1.84	231	0.0031	8	0.349	AC	0.013	0.67	1.91
tillson sewer 15	Concrete w/ brick invert; good condition	21.3	13.3	tillson sewer 16	13.4	250	0.0436	8	0.349	AC	0.013	2.52	7.23
tillson sewer 16	Concrete w/ brick invert; good condition; minor sedimentation	11.5	2.26	tillson sewer 17	2.36	117	0.0105	8	0.349	AC	0.013	1.24	3.54
tillson sewer 17	Concrete w/ brick invert; good condition; minor sedimentation			Tillson Avenue Pump Station/FM									
Tillson Avenue Pump Station/FM				Tillson sewer 14									
tillson sewer 14	Concrete structure; in from Tillson Avenue pump station; good condition	24.4	18.0	tillson sewer 11	18.1	120	0.0191	8	0.349	AC	0.013	1.67	4.79
tillson sewer 11	Concrete w/ brick invert; good condition; sedimentation	26.1	15.7	tillson sewer 12	15.8	20	0.0170	8	0.349	AC	0.013	1.58	4.51
tillson sewer 12	Concrete w/ brick invert; good condition; minor sedimentation	25.9	15.21	tillson sewer 10	15.3	128	0.0051	10	0.545	AC	0.013	1.57	2.88
tillson sewer 10	Concrete w/ brick invert; good condition	24.3	14.5	tillson sewer 6	14.6	255	0.0135	12	0.785	AC	0.013	4.14	5.27
tillson sewer 6	Concrete w/ brick invert; good condition	21.4	10.9	tillson sewer 3	11.0	85	0.0382	12	0.785	AC	0.013	6.96	8.87
tillson sewer 3	Concrete w/ brick invert; good condition; appears to be older pipe			Plant									
wharf sewer 2	Concrete w/ concrete invert; good condition; minor sedimentation	22.5	17.8	Wharf sewer 1	17.9	278	0.0076	8	0.349	AC	0.013	1.05	3.01
wharf sewer 1	Concrete; invert surface not visible; fair condition; significant sedimentation	20.9	15.6	tillson sewer 15	15.7	32	0.0693	8	0.349	AC	0.013	3.18	9.11
lime sewer 2	Concrete and brick; brick invert; fair condition; all surfaces coated	25.4	18.1	lime sewer 4	18.2	203	0.0019	8	0.349	AC	0.013	0.52	1.49
lime sewer 4	Concrete and brick; poor condition; broken pipe and broken brick; sedimentation	24.8	17.6	tillson sewer 12	17.7	230	0.0100	8	0.349	AC	0.013	1.21	3.47

Table 2: Photographs of Existing Tillson Sanitary Sewer Manhole

Tillson 19

Tillson 18

Tillson 15

Tillson 16

Tillson 17

Tillson 14

Tillson 11

Tillson 12

Tillson 10

Tillson 6

Tillson 3

Wharf 2

Wharf 1

Lime 2

Lime 4

Main Street

In addition to evaluating the sanitary sewer on Tillson Avenue, we investigated the sanitary sewer on Main Street as part of the field study. The Main Street sanitary sewer and stormdrain systems are combined, and large pipe sizes are in place to account for higher stormwater flows. There are catch basins along the length of Main Street at each side street intersection to collect stormwater. Some of these structures are connected to combined sewer manholes, while others appear to connect directly into the combined sewer pipe. Roof drainage piping was also visible from some Main Street buildings; roof drains appeared to also be connected to the combined sewer system.

Combined sewer manhole structures were located in Main Street, mainly at intersections with side streets. During the field investigation, we identified manholes using the name of an intersecting street, or by "landmark" buildings including Key Bank and the Navigator Motor Inn. Table 3 provides a list of these structures, along with observed information about each structure. Photographs of each structure are provided in Table 4, where "structure names" correlate to structures listed in Table 3.

Pipe flow and velocity were evaluated for the Main Street combined sewer. All the pipes were analyzed using a Manning's coefficient of 0.013 for clay pipe. The pipe from Park Street to Oak Street was 24 inches in diameter, with a capacity of 14.2 cfs to 23.6 cfs, with velocities of 4.5 fps or greater. The pipe increased to 36 inches in diameter after Oak Street, and had a calculated capacity ranging from 14.3 cfs up to 87.8 cfs, depending on each section of pipes slope. Calculated velocities in the 36 inch pipe ranged from 2 fps up to 12.4 fps (greater than the 10 fps recommended maximum).

We analyzed the pipe network north of the wastewater treatment plant, including three manholes on Tillson Avenue (at the intersection of Granite Street, in front of the Navigator Motor Inn, and intersection of Lindsey Street). The calculated flows for these 18" clay pipes ranged from 6 cfs up to 21.2 cfs, with velocities of 3.39 fps to 12 fps (greater than the 10 fps recommended maximum).

The stormwater flow in this combined system was not evaluated as part of the analysis. We did observe some damage in some structures, and calculated flow velocities indicate that scour may be a problem in some of the pipes; however the actual condition of the pipe network is unknown. The piping system should be televised to determine the extent of sedimentation and scour, and a repair or replacement strategy could be developed to best meet the City's capital improvements strategy for its infrastructure. As part of this Plan and the associated cost estimates outlined in herein, we are not including any improvements to the Main Street combined sewer infrastructure as there have been no reported combined sewer overflows for the past 5 years as reported in the City's Annual CSO Report.

The Park Street and Main Street Interceptors, which overflow into the Lindsey Brook system during wet weather events, have been identified by the City as a high priority for sewer replacement/improvements project. Its schedule for implementation has not yet been determined; however we recommend the City continue to try to find a mechanism to complete this work.

Table 3: Existing Main Street Sanitary Sewer

Upstream Structure	Structure Condition Comments	Rim Elevation (ft)	Invert Out (ft)	Downstream Structure	Invert In (ft)	Connecting Distance (ft)	Slope (ft/ft)	Pipe Diameter (in)	Pipe Area (ft^2)	Assumed Pipe Material for Calculation	Manning's "n"	Flow (cfs)	Velocity (ft/s)
park sewer 1	Square brick structure; poor condition; broken bricks and sedimentation in base	32.6	24.8	Park sewer 2	24.9	56	0.0079	24	3.142	clay	0.013	20.1	6.38
park sewer 3	Concrete; fair condition; base of structure blocked from view	32.5	24.3	orient sewer	24.4	112	0.0109	24	3.142	clay	0.013	23.6	7.52
orient sewer	Concrete; concrete invert; fair condition	32.2	22.9	Oak sewer	23.0	103	0.0039	24	3.142	clay	0.013	14.2	4.51
oak sewer	Square brick structure; fair condition; no noticeable invert	31.5	22.4	key bank sewer	22.5	51	0.0005	36	7.069	clay	0.013	14.3	2.02
sewer key bank	Concrete; concrete invert; fair condition; minor sedimentation	31.4	22.5	Elm sewer	22.6	98	0.0048	36	7.069	clay	0.013	46.4	6.56
elm sewer	Concrete; concrete invert; fair condition; minor sedimentation	30.6	21.7	farnsworth sewer	22.0	137	0.0173	36	7.069	clay	0.013	87.8	12.4
farnsworth sewer	Concrete; concrete invert; fair condition; sedimentation; pipe not visible	29.4	19.3	museum sewer	19.4	49	0.0133	36	7.069	clay	0.013	77.0	10.9
museum sewer	Concrete; concrete invert; fair condition	29.2	18.5	school sewer	18.6	166	0.0100	36	7.069	clay	0.013	66.6	9.42
school sewer	Square brick structure; fair condition; no noticeable invert	28.5	16.7	limerock sewer	16.8	236	0.0115	36	7.069	clay	0.013	71.6	10.1
limerock sewer	Concrete; fair condition			overflow/WWTF									
granite sewer	Concrete; fair condition	29.8	16.0	navigator sewer	16.1	326	0.0033	18	1.767	clay	0.013	6.00	3.39
navigator sewer	Concrete; fair condition	26.9	14.8	lindsey sewer	14.9	326	0.0408	18	1.767	clay	0.013	21.2	12.0
lindsey sewer	Concrete; fair condition; pieces of pipe laid in invert			overflow/WWTF									

Table 4: Photographs of Main Street Sanitary Sewer Manholes

Park sewer 1

Park sewer 3

Orient sewer

Oak sewer

Key Bank sewer

Elm sewer

Farnsworth sewer

Museum sewer

School sewer

Limerock sewer

Granite sewer

Navigator sewer

Lindsey sewer

2.4 PROPOSED WASTEWATER FLOWS

The analysis provided in the previous section looked at the existing capacity of the pipe network in the Tillson Avenue area. This section examines the new flows envisioned under proposed build-out scenario developed as part of the Tillson District and Waterfront Redevelopment Plan.

Using the proposed build-out scenario, we have developed generation rates and capacity requirements for the sanitary sewer system. The proposed build-out scenario includes 6 blocks, each with retail, office, restaurant, and residential space. The sanitary sewer flow requirements vary for each use, as defined by *10-144 CMR 241, Maine Subsurface Wastewater Disposal Rules Sections 501.0 and 502.0*. The following table provides the recommended design flows for each building use proposed in the Redevelopment Plan.

Table 5: Typical Design Flows

Type of Facility	Additional Specifications	Design Flow
Residential	2 bedrooms or less	180 GPD per dwelling
Restaurant	3 meals served per day	30 GPD per seat 15 GPD per employee
Retail	no public restroom	1 GPD per parking space 15 GPD per employee
Office/Commercial	no showers	20 GPD per employee

Residential Wastewater

Total wastewater generation rates for residential units are based on the number of bedrooms in each unit. All proposed Tillson Avenue residential units are either one or two bedroom units, with a design flow of 180 GPD per dwelling. The following table includes calculated residential sanitary sewer design flows for each of the six proposed blocks.

Table 6: Total Anticipated Residential Sanitary Sewer Flows

Block	Number of 1 or 2 Bedroom Units	Total Anticipated Flow (GPD)
I	13	2340
II	14	2520
III	13	2340
IV	12	2160
V	16	2880
VI	20	3600
TOTAL	**88**	**15840**

Restaurant Wastewater

Wastewater requirements for restaurants are typically based on the number of seats plus the number of employees. Seating design varies significantly based on the type of restaurant. As the proposed restaurant areas have not been designed, a different measure of occupancy was used to assess generation rates. *NFPA 101 Life Safety Code* Table 7.3.1.2 provides additional guidance on occupant load factors. For an assembly use that is considered to be less concentrated, an area of 15 square feet per person is used. To account for unused space, such as closets, storage

rooms, etc. a usable floor space for the restaurant of 80% was applied. An assumption of one employee per 20 customers was also made. The following flows result from these assumptions.

Table 7: Total Anticipated Restaurant Sanitary Sewer Flows

Block	Area (SF)	Seats	Employees	Total Anticipated Flow (GPD)
I	4830	258	13	7935
II	5287	282	15	8685
III	3000	160	8	4920
IV	4500	240	12	7380
V	2690	144	8	4440
VI	5920	316	16	9720
TOTAL	**26227**	**1400**	**72**	**43080**

Retail Wastewater

There are multiple methods for estimating retail wastewater generation rates. Using the *Maine Subsurface Wastewater Disposal Rules*, wastewater generation rates for retail spaces are based on the number of parking spaces and the number of employees. Parking spaces for the proposed Tillson Avenue retail areas were calculated at one per 250 square feet of space. The number of employees was conservatively calculated at one per 400 square feet of space. Based on these assumptions, the following flows were calculated.

Table 8: Total Anticipated Retail Sanitary Sewer Flows (Option 1)

Block	Area (SF)	Parking	Employees	Total Anticipated Flow (GPD)
I	11270	45	29	480
II	8800	35	22	365
III	7010	28	18	298
IV	9000	36	23	381
V	6270	25	16	265
VI	5920	24	15	249
TOTAL	**48270**	**193**	**123**	**2038**

Alternatively, data indicates that retail wastewater generation rates can be calculated generally using the assumption that flows will equate to 0.05 gallons per day per square foot of retail space *(Miami-Dade Water and Sewer Department's Schedule of Daily Rated Gallonage for Various Occupancy*.)

Table 9: Total Anticipated Retail Sanitary Sewer Flows (Option 2)

Block	Area (SF)	Total Anticipated Flow (GPD)
I	11270	564
II	8800	440
III	7010	351
IV	9000	450
V	6270	314
VI	5920	296
TOTAL	**48270**	**2415**

Using this second option, higher flows are calculated for each block, resulting in an approximately 20% higher total required retail sanitary sewer capacity for the Tillson area compared to the calculations from Option 1. This more conservative value will be used for estimating total capacity requirements.

Office/Commercial Wastewater

For office/commercial space, the flows depend on the number of employees working in the space. An assumption of 20% unoccupied space was made to account for storage, circulation, common areas, etc. An estimate of one employee per 100 square feet of area (a ten foot by ten foot work space) was made based on *NFPA 101 Life Safety Code* Table 7.3.1.2.

Table 10: Total Anticipated Office/Commercial Space Sanitary Sewer Flows

Block	Area (SF)	Employees	Total Anticipated Flow (GPD)
I	16100	129	2580
II	21138	170	3400
III	10010	81	1620
IV	15000	120	2400
V	8960	72	1440
VI	17760	143	2860
TOTAL	**88968**	**715**	**14300**

Total Wastewater Projections

Considering the proposed uses on Tillson Avenue, a total flow requirement can be calculated. To account for changes in flow due to the time of day, time of season, or any other varying factors, a peaking factor is applied to the total flow. Based on *TR-16, Guides for the Design of Wastewater Treatment Works*, we have applied a peaking factor of 6 for the flows anticipated. With this factor in place, the flows from the proposed residential, restaurant, retail, and office uses on Tillson Avenue result in a total anticipated peak daily flow of approximately 454,000 gallons.

Table 11: Total Anticipated Sanitary Sewer Flow

Use	GPD
Residential	15840
Restaurant	43080
Retail	2415
Office/Commercial	14300
TOTAL	**75635**
Peaking Factor of 6	
Total Anticipated Design Flow: 453,810 GPD	

2.5 PROPOSED SANITARY SEWER SYSTEM

The sanitary sewer in Tillson Avenue will be required to handle sanitary sewer flows from the redevelopment area as well as sanitary sewer flows from the existing Tillson Avenue pump station. As calculated, anticipated new sanitary sewer flows from the Tillson Avenue redevelopment are 454,000 gallons per day. The estimated maximum flow produced by the pump station is limited by the existing capacity of the pipe downstream of the pump station, 1.57 cfs as provided in Table 1. Combining these flows, the total flow capacity requirement of the sanitary sewer pipe in Tillson Avenue is 2.29 cfs; the existing 8" and 10" diameter pipes in Tillson Avenue do not provide this capacity.

We recommend that a portion of the existing sanitary sewer in Tillson Avenue be replaced. In addition, new sanitary sewers are required to be installed in areas where sanitary sewer doesn't currently exist, and the reconstruction of the sanitary sewer in Tillson Avenue will facilitate the connection of this new sanitary sewer. In addition, the proposed Redevelopment Plan includes roadway realignment and reconstruction that will impact the location of the existing sanitary sewer. The proposed new sanitary sewer is shown in Figure 3.

Figure does not call out the replacement of sanitary sewer pipe on the eastern end of Tillson Avenue. We recommend that the City perform TV inspection to verify the integrity and condition of the pipe and that there is not significant sedimentation or scour that would be a detriment to the continued use of the system.

Sanitary Sewer Design Criteria

TR-16, Guides for the Design of Wastewater Treatment Works provides guidelines for minimum pipe slopes for various sized pipes. These slopes are specified such that flow velocities will not be lower than 2 fps, and sedimentation will not be a concern.

Table 12: Recommended Pipe Slopes and Capacities (PVC pipe, n = 0.01)

Pipe Diameter	Minimum Slope (ft/ft)	Flow Capacity (cfs)	Flow Velocity (fps)
8"	0.0040	1.0	2.8
10"	0.0028	1.5	2.8
12"	0.0022	2.2	2.8

Referring back to Table 1, all but one length of the existing Tillson Avenue sanitary sewer pipe meets the minimum slope requirements.

Proposed Sanitary Sewer Infrastructure and Changes

The proposed sanitary sewer pipe in Tillson Avenue should be 12" PVC pipe, installed to meet the minimum slope requirements provided above. The sanitary sewer pipe in Tillson Avenue will be required to handle 2.29 cfs of flow. This will require a slightly steeper slope than the 0.0022 minimum. Based on Manning's equation, a slope of 0.0025 will be necessary to provide the required capacity. There is no concern with achieving this slope, as all of the existing piping in Tillson Avenue has slopes steeper than 0.0025.

As shown in Figure , new sanitary sewer will also be required to be installed on Lime Street, Park Drive, Commercial Street, and new streets "A" and "C". These sanitary sewer lines should be 8" PVC pipe, and will each carry a portion of the new 454,000 gallons per day sanitary sewer flow. As indicated in Table 12, an 8" PVC pipe installed at the minimum slope provides a flow capacity of 1.0 cfs.

Sanitary sewer manholes should be installed at all intersections. No new sewer is proposed for Weeks Street or for new streets "B" and "D". The locations of the proposed manholes will facilitate the installation of sanitary sewer on these streets if it is determined necessary to support development in the future.

Existing sanitary sewer infrastructure in Park Drive will need to be relocated to facilitate the proposed realignment of Park Drive and Commercial Street. An existing forcemain runs in Park Drive, connecting the Tillson Avenue pump station to the wastewater treatment facility. Parallel to this forcemain is a 36" pipe that serves as the outfall for treated effluent from the wastewater treatment facility. Sections of these two pipes will need to be relocated as proposed in Figure 3.

Figure 3: Proposed Infrastructure

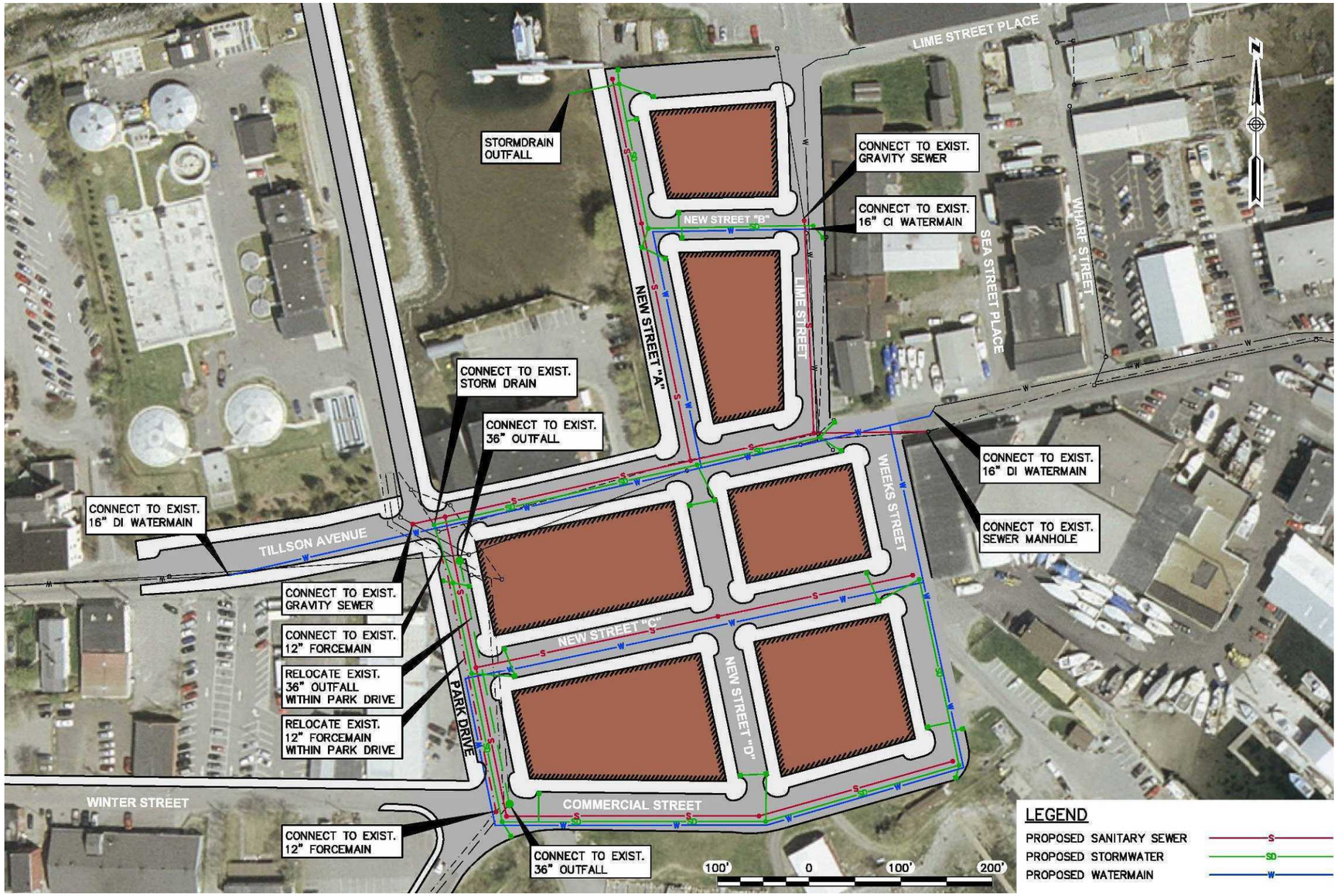

3. STORMDRAIN SYSTEM

3.1 INTRODUCTION

Much of the City of Rockland's stormwater is collected and transported through combined sewer infrastructure; however, portions of the City's stormdrain have been separated from the sanitary sewer. The area of interest that was studied for this report included both combined and separated systems. The Redevelopment Plan proposes to have separated storm drain and sanitary sewers.

3.2 DATA COLLECTION AND MAPPING

Data on catch basins, stormdrain manholes, and combined sewer manholes was collected as part of the field investigation described previously.

3.3 EXISTING STORMDRAIN EVALUATION

Main Street

The stormdrain system within Main Street consists of catch basins located at each side street intersection. Some of these structures are connected directly to combined sewer manholes, while others appear to connect directly into the combined sewer mainline pipe. Roof drains were also visible from some Main Street buildings. The combined sewer pipe within the street ranges in size from 24" to 36". The capacity of the system is described earlier in this Infrastructure Plan.

The City holds significant concerns with the stormwater infrastructure as it relates to the Lindsey Brook drainage area. The City reports that storm sewers in the drainage area have limited capacity and regularly result in downtown flooding. The City has taken the first steps to help improve the system with the planned Lindsey Brook Interceptor Project. Currently, a schedule for its implementation has not been determined.

Tillson Avenue / Waterfront

Based on field observations of connectivity and on examination of site plans for Tillson Avenue, the existing stormdrain appears to be separated from the sanitary sewer. Stormdrain flow from catch basins at the Lime Street and Park Drive intersections is directed onto the treatment plant property by way of manholes and piping that is separate from the sanitary sewer. This piping is identified in Figure 22, however it is unclear at this time if the stormwater is treated at the wastewater treatment plant or if it is discharged directly to Lermond Cove.

Additional catch basins upstream of the redevelopment area do not appear to connect into the sanitary sewer. An outfall was observed at the end of Wharf Street, and is shown on Figure 22. This pipe appeared to connect to three catch basins on Wharf Street. Other catch basins upstream on Tillson Avenue appear to have their pipe outlets directed towards the water, and not towards the sanitary sewer system; however outfalls were not located and therefore could not be verified.

3.4 PROPOSED STORMDRAIN SYSTEM

Stormdrain Design Criteria

The Rational Method of stormwater analysis was used to determine the general capacity of proposed stormdrain. The Rational Method calculates peak stormwater flow based on a runoff coefficient defined by the surface conditions, rainfall intensity defined for a particular geographic region, and the size of the area being collected by the stormdrain.

The runoff coefficient for downtown areas ranges from 0.7 to 0.95. For our calculations, an average of this range, or 0.83 was used. Data for rainfall intensity for specific municipalities is available from the Maine Department of Environmental Protection. The cities closest to Rockland with data available were Portland and Eastport. The intensities for Portland were used for our calculations as they are more conservative than the intensities for Eastport.

Table 13: 25-Year Storm Rainfall Intensities

Time of Concentration (min)	Intensity (in/hr)	
	Portland	Eastport
5	6.2	5.6
10	5.0	4.4

Main Street

At this time we are not including any recommended changes to the existing combined sewer system within Main Street as part of this Infrastructure Plan. We recommend that the City televise the combined sewer to better determine the current condition of the pipe. If extreme sedimentation, scour, or other conditions are identified that impact capacity or integrity, cleaning, repair, or replacement may be necessary.

Catch basins, in general are installed at shallower depths than the combined sewer line. Most of the catch basins on Tillson Avenue were found to be in good condition. There are a few older catch basins that were found to be in poor condition, and photos of each of these basins, labeled with the intersection where the basin is located, are included in Table 14. The replacement of damaged and non-functioning catch basins on an as-needed basis may reduce any localized flooding that may occur during heavy rain events.

Tillson Avenue / Waterfront

The proposed build-out scenario will require the installation of a new stormdrain system within the proposed street network. Given the proximity to the Bay and the high intensity/urban nature of the development, the Redevelopment Plan recommends the City consider “green street” concepts/techniques in the design of new streets and associated stormwater systems; these techniques include incorporating various types of treatment devices such as tree box filters and soil filters, use of pervious pavements, vegetating sidewalk bump outs, among other options to beautify the streets, control flooding, cool stormwater runoff, and remove contaminant loads. Based upon the existing topography of the area, we anticipate catch basins will be located at the new perimeter intersections. The southern area of redevelopment is approximately 5 acres in size; using the Rational Method to calculate flow, and assuming a time of concentration of 10 minutes, this area would produce a peak runoff of approximately 21 cfs during a 25-year storm event. This calculated flow is conservative and final design of the area will have a significant impact on the actual flow.

A 24” pipe with a slope of 0.01 would be adequate to convey 21 cfs of flow from this section of the redevelopment area. The existing Tillson Avenue stormdrain connects to an 18” pipe that conveys stormwater to the wastewater treatment facility property. This pipe may need to be replaced to handle stormwater flow; however, a more detailed

stormwater analysis following the final design of streets, buildings, and stormwater management measures could indicate that the existing 18" pipe is adequate.

The proposed redevelopment area north of Tillson Avenue and paralleling Lime Street will be served by the installation of a number of new catch basins and will likely require the construction of a new stormwater outfall. The area is approximately 2 acres in size. Assuming a time of concentration of 5 minutes, the peak runoff flow for a 25-year storm is approximately 10 cfs. This flow can be managed by an 18" pipe with a slope of 0.01. As with the piping recommendations given for the southern section of the Tillson Avenue redevelopment, the sizes and slopes are only preliminary recommendations for the purpose of this Infrastructure Plan. The final pipe size and slope could vary significantly depending on the final design. The proposed layout of the new storm drain collection system can be seen in Figure 4.

Table 14: Main Street Catch Basins in Poor Condition

Elm Street

Damaged structure; broken blocks; broken pipe

School Street

Old, small structure; broken blocks; blocked flow

Limerock Street

Broken block risers; blocked flow

Museum Street

Damaged structure; broken brick and blocks; broken pipes

Mid-block (between Limerock Street and Lindsey Street)

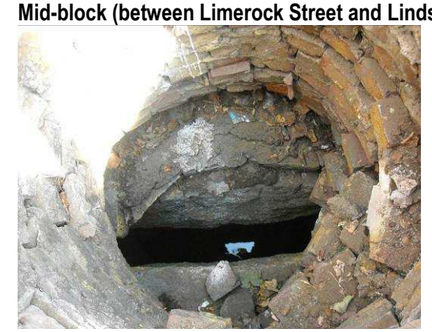

Damaged structure; broken blocks and bricks

Talbot Avenue

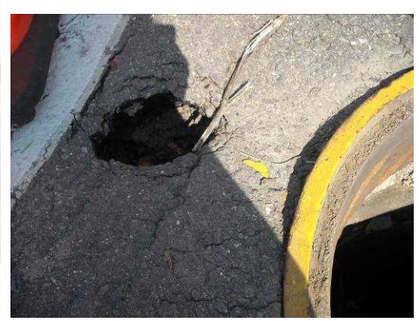

Broken riser bricks; small sink hole next to basin

Granite Street

Damage structure; broken blocks and bricks; debris; blocked flow

Figure 4: Proposed Infrastructure

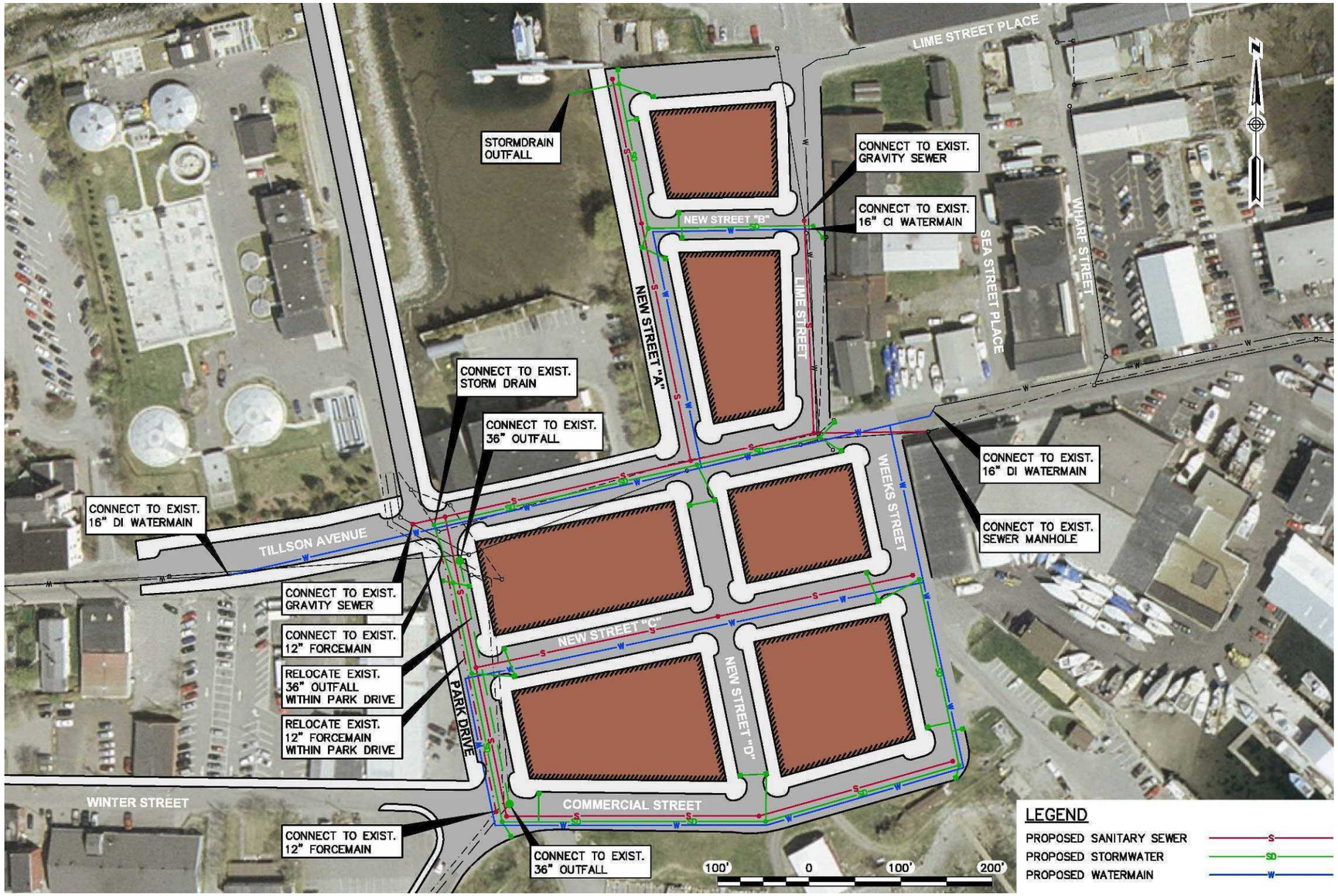

4. WATER SYSTEM

4.1 INTRODUCTION

The redevelopment plan outlined in the Redevelopment Plan consists of 3, 4, and 5-story buildings that include various uses. Adequate water will be required to service these buildings potable water needs, as well as to provide fire protection. The existing Tillson Avenue system has been considered as part of this report; however the water system on Main Street will not be directly affected by the Tillson District and Waterfront Redevelopment Plan redevelopment scenario.

4.2 DATA COLLECTION AND MAPPING

GIS data was provided by Aqua Maine, including the locations of the water main, service connections, and hydrants in the Tillson Avenue area. In addition, flow data was provided for the hydrants based on past testing results. Aqua Maine has indicated that the data they provided was dated, and should not be considered up to date. With only this information available, we chose to use it in our analysis as the best available information. We recommend that further hydrant testing be completed to verify the available flow rates prior to determining any changes or upgrades to the existing infrastructure.

4.3 EXISTING WATER SYSTEM

The water main located in Tillson Avenue and the surrounding streets varies in size and material. Figure 5 provides all of the material types and sizes for the existing waterline piping, as well as the locations of existing hydrants. On the western half of Tillson Avenue, from Main Street to just beyond Lime Street, the water main consists of a 16" ductile iron pipe. This pipe extends through the area being considered as part of this Tillson Avenue plan. Beyond Lime Street and extending to the end of Tillson, the pipe is reduced to an 8" ductile iron pipe. The Lime Street water main is 16" cast iron pipe, and appears to be the connection to the FMC property to the north of Tillson Avenue. Commercial Street, running parallel with Tillson Avenue to the South has 8" cast iron pipe. Weeks Street, connecting Commercial Street to Tillson Avenue has a 6" cast iron pipe.

Hydrants are located throughout the area, and flow measurements obtained from hydrant flushing are available for some of the hydrants. We understand from Aqua Maine, that all hydrants were tested by drawing down the hydrant to a pressure of 20 psi, and measuring the resulting flow. The static pressure in each tested hydrant was also recorded. The results of historical hydrant testing for relevant hydrants in the Tillson Avenue area, as provided by Aqua Maine are included in Table 15; these hydrants are also shown on Figure 5.

Table 15: Historical Flow Data for Tillson Avenue Area

Hydrant Location	Flow (GPM)	Static Pressure (psi)
Wastewater Treatment Plant, Off Tillson Avenue	2759	100
Lime Street, Northern End of Street	3142	96
Tillson Avenue, Approaching Main Street	3492	96
Tillson Avenue, West of Lime Street	3357	96
Commercial Street, Near Park Drive	3580	95

While flow data provided is not from current testing, conversations with the City of Rockland Fire Chief, Charles Jordan, have indicated that flows in the Tillson Avenue area are some of the best in Rockland as far as meeting the needs of the fire department, suggesting that the high flows of 2500 to 3500 gallons per minute at greater than 95 psi are representative of what is currently seen in the area.

4.4 NEW FLOW REQUIREMENTS

The potable water demand to accommodate the Redevelopment Plan was calculated based upon the *American Water Works Association Manual M-22*. Table 16 summarizes the results of these calculations.

Table 16: Total Anticipated Potable Water Flow

Use	Total GPM	CFM
Residential	9.17	1.26
Restaurant	42.3	5.64
Retail	9.85	1.38
Office/Commercial	9.93	1.32
TOTAL	**71.3**	**9.60**
Apply Peaking Factor of 9		
Total Anticipated Design Flow: 641 GPM		

Based on discussions with the City of Rockland Fire Chief, AquaMaine, and on the requirements provided by the Insurance Services Office, Inc. (ISO) and the National Fire Protection Organization (NFPA), the required fire flows for the type of development project proposed in the Redevelopment Plan would typically be 1000 gallons per minute. This is larger than the potable water demand calculated previously and will control the requirements for the system. The historical hydrant data flows indicate that there should be adequate water capacity, and the Fire Chief confirmed that he believed this was the case as well. We recommend however, that hydrant testing be completed prior to the design and construction of any of the Tillson Avenue improvements.

4.5 PROPOSED WATER SYSTEM

There are no reported capacity issues within the existing water system in the Tillson Avenue TIF District. However, based upon the proposed build-out scenario, alterations as well as additions to the current pipe network will need to occur. The 16" water line within Tillson Avenue will need to be relocated in the area between Lime Street and the wastewater treatment plant to avoid conflicts with the proposed building footprints. In addition, the existing 8" water line located on Commercial Street, between Park Drive and Weeks Street, will need to be relocated within the proposed realignment of Commercial Street. With road reconstruction taking place, we recommend the existing 6" water line within Weeks Street be replaced with a new 8" line, to provide consistency and provide a new system for the total redeveloped area. In order to serve the proposed building layout, an 8" line will run from Weeks Street down New Street "C" and will connect back to the line in Commercial Street to provide a looped system. To service the proposed building areas located to the north of Tillson Avenue, we recommend a new 8" line be located within New Street "A" and connect back into the line located on Lime Street. The recommended schematic water line layout can be seen in Figure 6; however we also recommend the City collaborate with Aqua Maine to ensure the most efficient system is considered and appropriate loops are designed.

In addition to the existing hydrants, we anticipate up to 4 new hydrants may be required. This number may be reduced based upon the recommendations by the Rockland Fire Department and the State Fire Marshall Office. In addition, we anticipate fire department connections/hookups may also be required on the building exteriors.

Figure 5: Existing Water Infrastructure

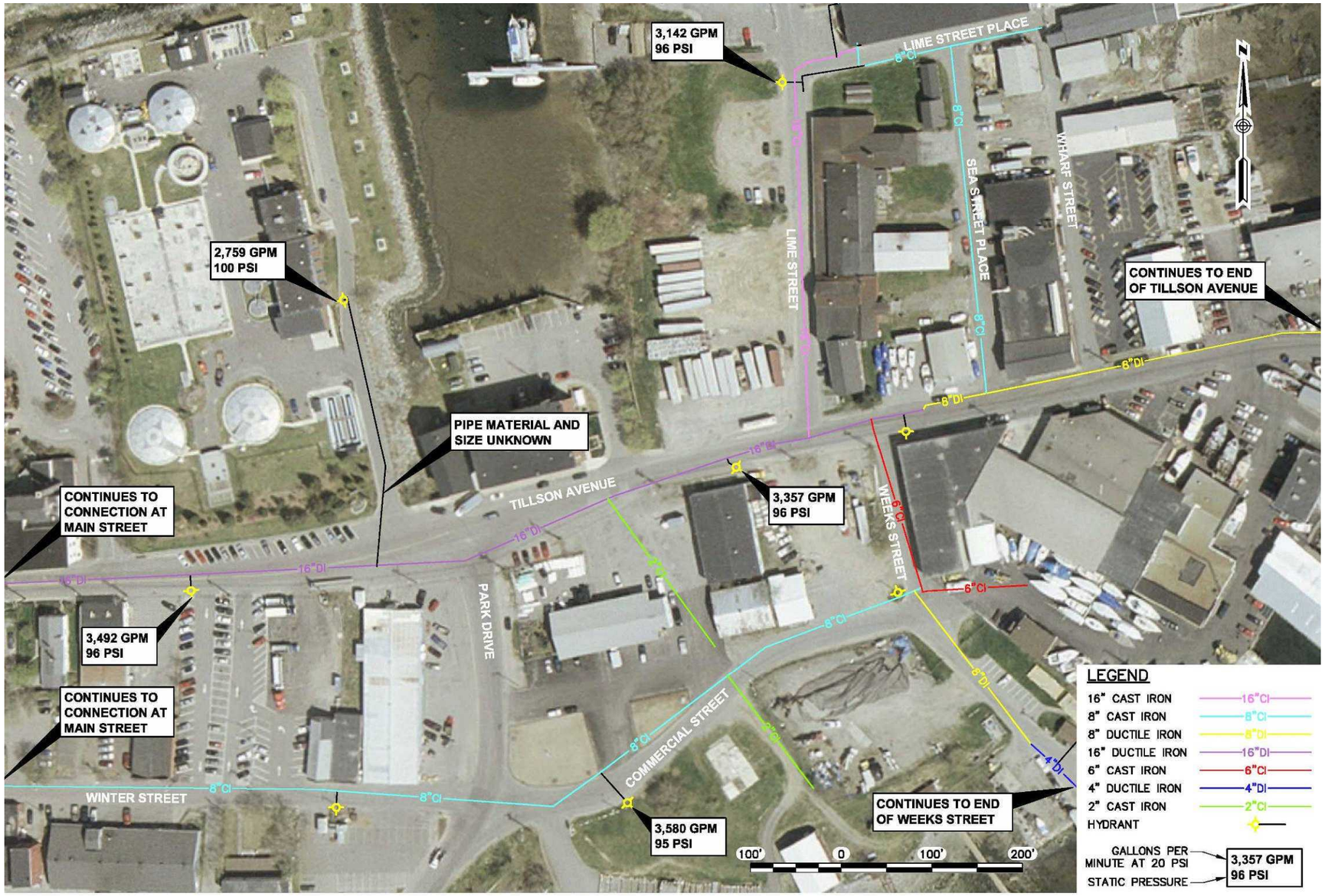

Figure 6: Proposed Infrastructure

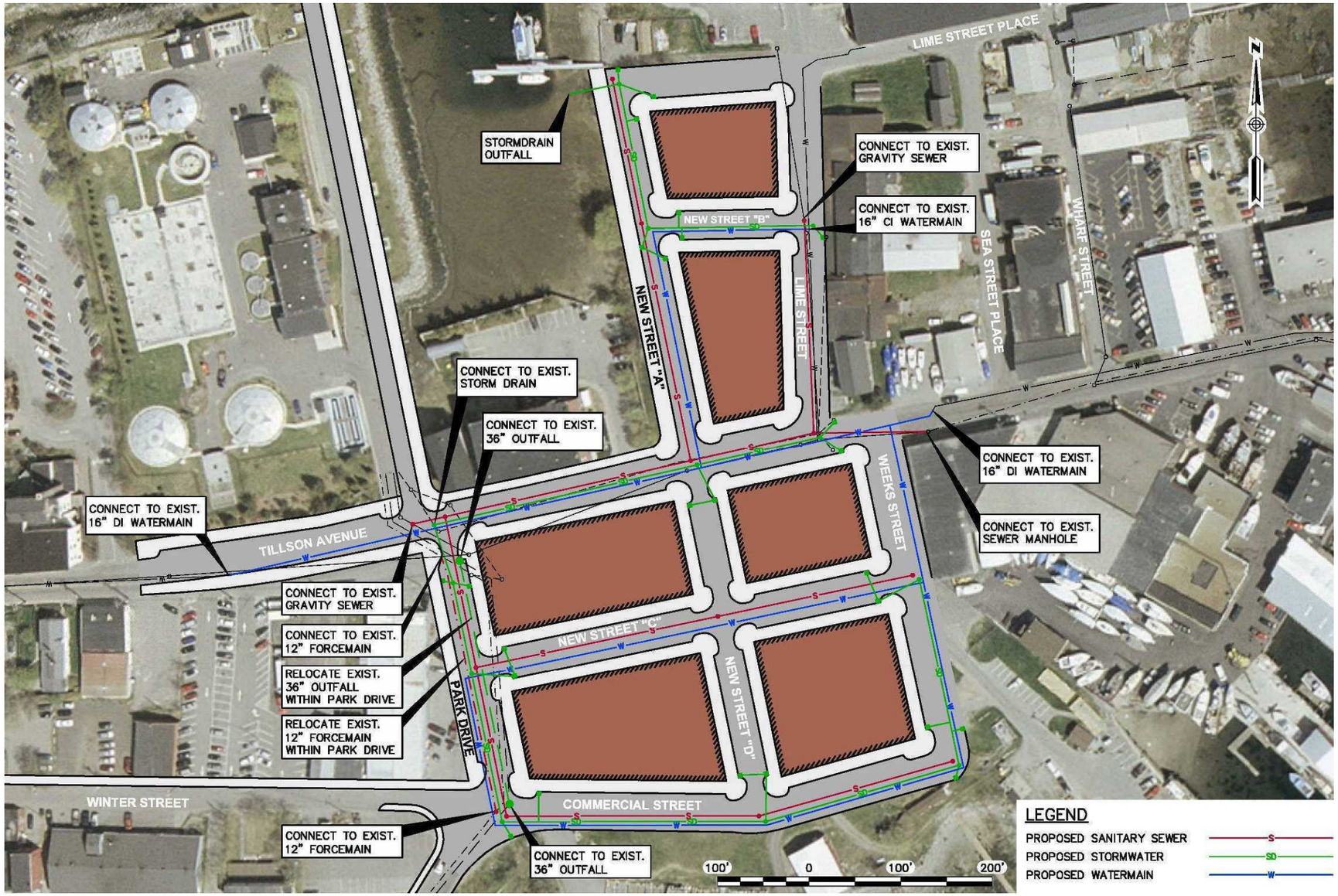

5. SIDEWALK

5.1 INTRODUCTION

During the fall of 2009, and subsequently in fall 2010, a sidewalk inventory and evaluation was completed for the study area to document existing conditions and assess future needs. A summary of the sidewalk review is provided in the following sections, and includes figures and tables documenting the complete results of the field inventory.

5.2 EXISTING CONDITIONS

Main Street Area

An assessment of sidewalks was done for the Main Street area, between Pleasant Street to the south and the Rankin/North Main Street intersection to the north. The sidewalks assessed are on Main Street, Union Street, and the connecting side streets between Main Street and Union Street. Portions of Water Street and Ocean Street were also included in the study area. The assessment focused on the condition of the sidewalk materials for each segment. Figure 8 shows the locations of the assessed sidewalk sections.

The Main Street sidewalks consist of a mix of brick and concrete. A few newly installed sections, mostly on the western side of the street were constructed using concrete pavers. These areas are in excellent condition. The remaining sections of older sidewalk on Main Street are primarily concrete with inlaid decorative brick. In general the sidewalk is in fair condition compared to other areas; however there are numerous concrete cracks and dislodged bricks that can cause problems with pedestrian travel. There are also many light poles and other structures within the sidewalk that are likely to impede the flow of pedestrian traffic.

Union Street primarily has sidewalk on the eastern side of the street. This sidewalk is all asphalt, and varies in condition. There are sections of newer, wide pavement sidewalks and there are other sections that are very narrow and have cracked, sunken pavement. There is no sidewalk along the length of Union Street on the western side. There is a narrow worn path on the grass just off the roadway, indicating that many pedestrians travel along that side of Union Street, even without a defined sidewalk.

There are a wide variety of sidewalk types and conditions on the multiple streets connecting Main Street and Union Street. The streets from Pleasant Street to Limerock Street have sidewalks of asphalt, concrete, and brick – in some cases all three types occur on the same street. In general the concrete and brick has held up better than the asphalt, which is cracked and sunken in many locations. The side streets north of Limerock all have asphalt sidewalk on only one side of each street. Many of these sidewalks are in disrepair, with cracks, and vegetation growing within the sidewalk. Curbing also varies, including bituminous, granite, and concrete materials.

The full inventory and findings for Main Street sidewalks are included in Table 17. To complete our analysis, we ranked the sidewalks on a scale of 1 to 5, (1=poor condition; 2=not great, bordering poor; 3=fair condition; 4=good condition; 5=very good condition, new). Rankings for each street's sidewalk are included in the table and the location of each identified section of sidewalk is shown in Figure 8. Photographs of the sidewalks are included in Table18.

Tillson Avenue/Waterfront

There is existing sidewalk of varying widths on four separate streets in the Tillson Avenue area, including Tillson Avenue, Park Drive, Winter Street, and the Public Landing Road. There are no existing sidewalks on Commercial Street, Lime Street, Weeks Drive, Lime Street Place, Sea Street Place, and Wharf Street.

The sidewalks present in the Tillson Avenue area varied in their condition of repair. Rankings for each street's sidewalk, based on the system described in the previous section, are included in the Table 7 and the locations of each identified section of sidewalk are shown in Figure 8, where legend numbers correlate to location numbers listed in the Table. The majority of the sidewalk within the area is constructed of asphalt pavement and is separated from the roadway with vertical granite curb. There are short sections of concrete sidewalk along Tillson Avenue, and there are also sections of asphalt curb on Tillson Avenue, Park Drive, and the Public Landing Road. In general, sidewalks within the area range from 4 to 7 feet wide with no consistency. Photographs of the sidewalks are included in Table.

5.3 RECOMMENDATIONS

Main Street

Pedestrian safety, connectivity, and redirecting the primary focus of Main Street away from being vehicle-centered to being pedestrian oriented continue to be important to Rockland residents, business owners, and city planners. Key improvements to Main Street pedestrian infrastructure and safety include widened, safer, and handicapped accessible sidewalks and crosswalks which are Americans with Disabilities Act (ADA) compliant; bolder, better defined and sign-posted crosswalks, especially on Main and Union Streets; and traffic calming, particularly on Main and Union Streets. Each of the recommendations herein is identified on the graphic below, by number.

Figure 7: Main Street Sidewalk Improvements

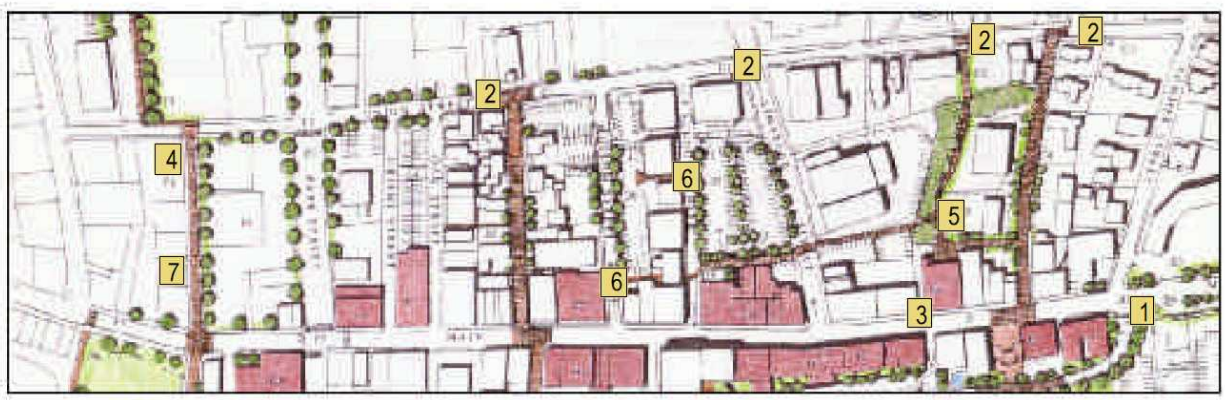

1. Make improvements to blighted and unsafe sidewalks along Main Street (as identified in the sidewalk assessment tables, particularly the section of Main Street between Limerock Street and the alleyways by 456 and 453 Main Street (Rock Coast Sport and Rheal Day Spa) and Summer Street (to the intersection of Rankin/North Main and Main Streets). Provide wider sidewalks, crosswalks and alleyways that are ADA compliant, wherever possible. This should entail replacement of the existing cracked in-laid concrete sidewalks with textured pavers with new or reset curbs from Limerock Street north to the alleyways at 456 and 453 Main Street, and asphalt pavement and light pole relocation from Summer Street north to the intersection of North Main and Main Streets by the Rankin Block which will necessitate narrowing the width of Main Street from Summer Street to the Rankin Street intersection extending the sidewalk curbing and reconfiguring the parking layout in order to accommodate these pedestrian transportation needs.

2. Provide for new ADA compliant crosswalks that are handicapped accessible, contain detectable warning devices, and constructed with textured pavers.

3. Relocate sidewalk obstacles or redesign sidewalk layout in locations north of Limerock where existing overhead light poles or bases are an impediment to pedestrian passage: for disabled persons in wheelchairs or in scooters, or who are visually impaired, or need the assistance of a cane.

4. Improve pedestrian safety and sidewalk, crosswalk and intersection connections between downtown neighborhoods (west of Union Street) and the downtown, particularly at Union Street intersections.

5. Create a walking trail from the library and neighborhoods (Union Street) to Main Street in the Lindsey Brook area (between Limerock and Lindsey Streets).

6. Create two through-block pedestrian walkways between Museum and School Streets.

7. Convert Myrtle Street into a one-way street that emphasizes the pedestrian connection (key to the pedestrian connection between the Union Street railroad station and downtown).

We also suggest overall design improvements to widen the "pedestrian corridor" (walkable corridor without light posts, trash receptacles, and other obstructions) to between 5' and 7', and to replace asphalt sidewalks with the brick and concrete design, wherever possible.

Tillson Avenue/Waterfront

The most significant problem in the Tillson area is the lack of continuous and sufficiently wide sidewalk to provide a strong pedestrian experience. Where there is sidewalk, it does not provide connectivity between the existing street network or adequate accessible curb ramps and crosswalks. Additionally, there are some instances where the sidewalk is in conflict with on-street parking.

The build-out plan presented in the Tillson District and Waterfront Redevelopment Plan includes the construction of new blocks that include residential, restaurant, office, and retail buildings. The proposed blocks are surrounded almost completely by existing streets with no sidewalks. Sidewalks will be essential to the success of the area, and will need to be constructed on Lime Street, Weeks Street, Commercial Street, Park Drive, and the southern side of Tillson Avenue, where no sidewalk currently exists. The proposed block plan also calls for the construction of new streets that will have sidewalk as well. We also recommend that sidewalk be constructed, and replaced where currently present on Tillson Avenue, Winter Street, and Park Drive to provide connectivity between the proposed Tillson Avenue blocks to the existing Downtown District.

We recommend new sidewalks be constructed a minimum of 14' wide, consistent with the Tillson District and Waterfront Redevelopment Plan build-out sketches and be grade separated from the street; we recommend accessible curb ramps and crosswalks at all intersections and the use of bump-outs (also referred to as elephant ears) to shorten crossing distances at intersections and as a traffic calming measure. We recommend sidewalks in the area be constructed using similar materials that are being used for sidewalk replacement in the Downtown District, however we also encourage the City to consider the use of porous or pervious materials for its sidewalks.

Figure 8: Existing Sidewalk Infrastructure

Table 17: Existing Sidewalk Conditions

Location Number	Sidewalk Section	Materials				Condition	Comments
		Surface	Width	Curbing	Curb Reveal		
	Main Street (East)						
1	Water Street to Harbor Park Drive	concrete; asphalt	60"-72"	granite; asphalt	5"-7"	3	Uneven widths
2	Harbor Park Drive to Park Drive	asphalt	90"	granite; asphalt	4"	3	Newer section of asphalt sidewalk
3	Park Drive to Winter Street	new brick pavers; concrete w/ brick	110"-185"	granite	5"-7"	5; 3	Section in front of the Strand theater building has recently been replaced
4	Winter Street to Tillson Avenue	concrete w/ brick	90"	granite	6"	3	Some cracks visible in concrete
5	Tillson Avenue to Limerock Street	concrete w/ brick	90"	granite	6"	2	Some cracks visible in concrete; some broken bricks
6	Limerock Street to Parking Lot Entrance	concrete w/ brick; north end no brick	90”	granite	6”	2	Some cracks visible in concrete
7	Parking Lot Entrance to Summer Street	new brick pavers	90"-150"	granite	3"	5	Section has recently been replaced
8	Summer Street to Talbot Avenue	asphalt	90"	granite	0"-4"	1	Uneven surface; plant growth
9	Talbot Avenue to Granite Street	concrete; granite blocks	75"	asphalt	4"-5"	3	Some cracks visible in concrete
10	Granite Street to Willow Street	asphalt	48”	granite	7”	4	Includes new section of pavement
11	Willow Street to Rankin Street	asphalt	72”	granite	7”	4	Section is in good condition
12	Rankin Street to Cottage Street	asphalt	84”	granite	7”-8”	4	Section is in good condition
	Main Street (West)						
13	Robinson Street to Pleasant Street	asphalt	72"	granite	5"	3	Some sunken areas in asphalt
14	Pleasant Street to Myrtle Street	asphalt	84"-138"	granite	5"	3	Curbing on inside and outside edge of sidewalk
15	Myrtle Street to Park Street	asphalt	84"	granite	5"	3	Curbing on inside and outside edge of sidewalk
16	Park Street to Elm Street	concrete w/ brick	93"-168"	granite	4"-6"	3	Bump-out at Park St. intersection (9' 6")
17	Elm Street to Museum Street	new brick pavers	104"	granite	6"	5	Section has recently been replaced; planted esplanade
18	Museum Street to School Street	concrete w/ brick; granite block landscape edge	84"	granite	4"	3	100" bump-out section; planted esplanade
19	School Street to Limerock Street	concrete w/ brick; rounded brick landscape edging	84"	granite	6"	3	Fair but could be improved
20	Limerock Street to Alleyway	concrete with brick	103"	granite	5"	3	Fair but could be improved
21	Alleyway to Lindsey Street	new brick pavers	84”	granite	5”	5	Section has recently been replaced
22	Lindsey Street to Summer Street	new brick pavers	92"	granite	5"	5	Section has recently been replaced
23	Summer Street to Talbot Street	asphalt	60"	granite	1"-3"	2	Street lights in middle of sidewalk, making travel way very narrow
24	Talbot Street to Granite Street	asphalt	n/a	granite	2"-3"	1	Sidewalk undifferentiated from parking lot (no measured width)
25	Granite Street to Willow Street	asphalt	48”-60”	granite	2"-3"	2	Street lights in middle of sidewalk, making travel way very narrow; some sections in poor condition; under construction in fall 2010
26	Willow Street to Rankin Street	asphalt	48”-60”	granite	2"-3"	3	Some cracking and sunken areas; under construction in fall 2010
27	Rankin Street to North Main Street	asphalt	72””	granite; grass esplanade	4”-6”	3	Sidewalk in island; crosswalks connect Main Street
28	North Main Street to Cottage Street	asphalt	60”	granite	2”-7”	3	Some sunken areas
	Union St (East)						
29	Pleasant Street to Myrtle Street	none	n/a	none	n/a	n/a	No Sidewalk
30	Myrtle Street to Park Street	none	n/a	none	n/a	n/a	No Sidewalk
31	Park Street to Orient Street	none	n/a	asphalt	4"	n/a	No Sidewalk
32	Orient Street to Oak Street	none	n/a	asphalt	4"	n/a	No Sidewalk
33	Oak Street to Elm Street	asphalt	50"	granite	4"	3	Some sunken areas in asphalt; narrow
34	Elm Street to Museum Street	asphalt	40"	granite	0"-6"	3	Sections with minimal curb reveal; narrow
35	Museum Street to School Street	asphalt	38"	granite	0"-3"	1	Narrow sidewalk covered by crushed stone from adjacent building; sunken curb with minimal reveal

Table 17: Existing Sidewalk Conditions (continued)

Location Number	Sidewalk Section	Materials				Condition	Comments
		Surface	Width	Curbing	Curb Reveal		
36	School Street to Limerock Street	asphalt	63"	granite	5"	4	Newer asphalt
37	Limerock Street to Lindsey Street	asphalt	52"	granite	6"	3	Some cracking and sunken areas in asphalt; plant growth
38	Lindsey Street to Summer Street	asphalt	50"	asphalt	4"	3	Some cracking and sunken areas in asphalt; plant growth
39	Summer Street to Talbot Avenue	asphalt	48"	asphalt	6"	3	Some cracking and sunken areas in asphalt; plant growth
40	Talbot Avenue to Granite Street	asphalt	52"	asphalt	4"	3	Some cracking and sunken areas in asphalt; plant growth
41	Granite Street to Willow Street	asphalt	84"	asphalt	5"	2	Broken pavement at intersection; some cracking throughout
42	Willow Street to Rankin Street	asphalt	42"	granite	3"	3	Some cracking in asphalt; narrow
	Union St (West)						
43	Pleasant Street to Park Street	asphalt	46"-84"	asphalt	3"	2	Wide at restaurant entrance near Pleasant; some sunken areas
44	Park Street to Grace Street	asphalt; concrete at Grace St.	40"-60"	granite	4"-7"	3	Older concrete is worn and has plants growing in joints
45	Grace Street to Masonic Street	concrete	40"	granite	0"-6"	2	Severe cracking in concrete, especially at intersections
46	Masonic Street to Limerock Street	asphalt	54"	granite	6"	3	Some sunken areas in asphalt
47	Limerock Street to Grove Street	none	n/a	granite; asphalt; none	n/a	n/a	No sidewalk; worn path where people have walked on grass
48	Lindsey Street to Summer Street	none	n/a	granite; asphalt; none	n/a	n/a	No sidewalk; worn path where people have walked on grass
49	Summer Street to Talbot Street	none	n/a	granite; asphalt; none	n/a	n/a	No sidewalk; worn path where people have walked on grass
50	Talbot Street to Granite Street	none	n/a	granite; asphalt; none	n/a	n/a	No sidewalk
51	Granite Street to Willow Street	none	n/a	asphalt	4"	n/a	No sidewalk
52	Willow Street to Rankin Street	none	n/a	asphalt	4"	n/a	No sidewalk
	Side Streets Connecting Union and Main						
53	Pleasant Street (S)	none	n/a	asphalt	3"-4"	n/a	No sidewalk
54	Pleasant Street (N)	asphalt	55"	granite	6"	3	Sidewalk surface in good condition
55	Myrtle Street (S)	asphalt; none	54"	none	n/a	n/a	No sidewalk
56	Myrtle Street (N)	asphalt	35"-42"	asphalt; granite tip-downs	3"-4"	1	Cracking in some areas of sidewalk; curbing in poor condition; plant growth through curb; narrow
57	Park Street (S)	asphalt	55"-72"	granite	5"-7"	3	Some minor surface cracks; plant growth
58	Park Street (N)	concrete	60"	granite	7"	5	Newer concrete
59	Orient Street (S)	concrete	48"-60"	granite	5"-6"	4	Newer concrete; Union St. end open to driveways
60	Orient Street (N)	brick	42"	granite	2"-10"	3	Narrower width sections fit against building; curb reveal varies significantly; Union St. end open for parking lot
61	Oak Street (S)	none	n/a	none	n/a	n/a	Short piece of concrete sidewalk at Main St. intersection doesn't provide any connectivity, possibly just a curb line for drainage to catch basin; building wall at edge of paved roadway
62	Oak Street (N)	asphalt	56"-66"	granite	3"-4"	3	Some sunken areas of pavement; sidewalk encroached by shrubs in some areas
63	Elm Street (S)	concrete; asphalt	48"-103"	granite; asphalt	2"-5"	1; 4	Union St. end in poor condition with failing asphalt; Main St. end new asphalt pavement connecting to concrete surface in good condition
64	Elm Street (N)	asphalt; concrete	48"-60"	asphalt; granite	3"-10"	3; 1	Concrete sidewalk in good condition; asphalt sidewalk in poor condition in areas; significant pavement failure around fence posts installed along edge of sidewalk
65	Museum Street (S)	concrete; granite blocks; none	50"	granite; asphalt	5"-7"	2	Bump out at Union St. end for change in traffic direction in poor condition with no curb remaining; different sidewalk widths result in lack of connectivity between museum entrance and continuing sidewalk

Table 17: Existing Sidewalk Conditions (continued)

Location Number	Sidewalk Section	Materials				Condition	Comments
		Surface	Width	Curbing	Curb Reveal		
66	Museum Street (N)	concrete; brick	55"-64"	granite	3"-7"	3;3;2	Concrete sidewalk at Main St end in fair condition; brick sidewalk has depressions in areas and there is gapping between bricks; concrete surface at Union Street end is in poor conditions, sunken and cracked; no consistency with three different sections of sidewalk on short street
67	School Street (S)	concrete; asphalt	64"-118"	granite	5"-6"	3; 3	Concrete sidewalk in fair condition; wide to provide entrance to museum; asphalt sidewalk in fair condition with some sunken areas
68	School Street (N)	asphalt	55"-62"	granite; asphalt	4"-7"	1; 4	Sidewalk from Custom House to Main St. in poor condition with cracks and depressions; Sidewalk at Union St. end in good condition, newer
69	Custom House (E)	none	n/a	none	n/a	n/a	No sidewalk; asphalt island w/ 4" reveal; open to parking lot
70	Custom House (W)	none	n/a	concrete	7"	n/a	No sidewalk; concrete curb and concrete retaining wall along road edge
71	Limerock Street (S)	concrete	60"-91"	granite	5"	4	Concrete sidewalk in good condition; sidewalk on Union St. end is newer
72	Limerock Street (N)	concrete	72"-80"	granite	5"	4	Concrete sidewalk in good condition
73	Lindsey Street (S)	none	n/a	asphalt	3"	n/a	No sidewalk; only a small section of asphalt curb midway between Union St. and Main St.
74	Lindsey Street (N)	asphalt	60"-80"	asphalt	6"	4	Sidewalk in good condition; normal wear, but no significant cracking or sunken areas
75	Summer Street (S)	asphalt	54"	asphalt	4"	3	Sidewalk in fair condition; cracking and failed asphalt at driveway entrances within sidewalk
76	Summer Street (N)	none	n/a	none	n/a	n/a	No sidewalk
77	Talbot Avenue (S)	asphalt	50"-70"	asphalt	3"-4"	2	Pavement surface cracking; plants growing in center cracks
78	Talbot Avenue (N)	none	n/a	none	n/a	n/a	No sidewalk
79	Granite Street (S)	asphalt	48"-56"	asphalt; granite	3"-6"	1	Pavement surface cracking; plants growing into sidewalk, undermining back edge
80	Granite Street (N)	none	n/a	none	n/a	n/a	No sidewalk
81	Willow Street (S)	none	n/a	concrete	3"-6"	n/a	No sidewalk
82	Willow Street (N)	asphalt	42"-46"	concrete; granite	6"-7"	1	Pavement surface cracking; sunken behind curbing; plants growing into sidewalk; island with granite curb at Main Street end
83	Rankin Street (S)	asphalt	48"	granite	3"	3	Sidewalk in fair condition; some cracks and plant growth
84	Rankin Street (N)	asphalt	46"	granite; concrete	3"	3	Some pavement surface cracking and sunken areas; no sidewalk at Union St. intersection
	Tillson Avenue Area Sidewalks						
85	Public Landing Road from Main St to Park Dr (S)	none	n/a	none	n/a	n/a	No Sidewalk
86	Public Landing Road from Main St to Park Dr (N)	asphalt; none	66"	asphalt; none	4"	3	Fair condition; short section, only next to building
87	Park Drive from Main St to Tillson Ave (S)	asphalt; none	48"-60"	asphalt; granite; none	4"-6"	3	Fair condition; asphalt curb between Tillson Avenue and Public Landing Road; granite curb between Public Landing Road and Main Street
88	Park Drive from Main St to Tillson Ave (N)	concrete; none	84"	granite; none	7"	4	Good condition; only a short section near Main Street intersection
89	Winter Street from Main St to Park Dr (S)	none	n/a	none	n/a	n/a	No Sidewalk
90	Winter Street from Main St to Park Dr (N)	asphalt; none	60"-78"	granite; none	7"	4	Good condition; ends halfway between Main Street and Park Drive
91	Tillson Avenue from Main St. to end (S)	concrete; none	48"-72"	granite; asphalt; none	4"-6"	3	Fair condition; sidewalk with granite curb near Main Street intersection; other random curb located at various locations along street
92	Tillson Avenue from Main St. to end (N)	asphalt; concrete; none	60"-84"	granite; none	4"-6"	3; 4; 2	Varied condition; most is fair condition asphalt; Coast Guard area newer concrete; Wharf Street area cracked concrete; sidewalk is not continuous
93	Commercial St. (both sides of road)	none	n/a	none	n/a	n/a	No Sidewalk
94	Weeks Dr. (both sides of road)	none	n/a	none	n/a	n/a	No Sidewalk

Table 17: Existing Sidewalk Conditions (continued)

95	Lime St (both sides of road)	none	n/a	none	n/a	n/a	No Sidewalk
96	Sea St. Pl. (both sides of road)	none	n/a	none	n/a	n/a	No Sidewalk
97	Wharf St. (both sides of road)	none	n/a	none	n/a	n/a	No Sidewalk
98	Lime St. Pl. (both sides of road)	none	n/a	none	n/a	n/a	No Sidewalk
	Water Street & Ocean Street Sidewalks						
99	Water St. from Main St. to Ocean St. (E)	concrete	60"	granite	7"	5	sidewalk in excellent condition
100	Water St. from Ocean St. to Main St. (W)	concrete and asphalt	48"-54"	granite	5"-7"	4	concrete and asphalt sidewalks in good condition; only minor cracks
101	Ocean St. from park area to Water St. (S)	asphalt	36"-42"	n/a	n/a	2	sidewalk is cracked; narrow; away from street; cobblestone & grass esplanade
102	Ocean St. from Water St. to park area (N)	concrete	60"	granite	7"	5	sidewalk in excellent condition

Table 18: Existing Sidewalk Condition Photographs

1. Main St. (E) Water St. to Harbor Park Dr.

2. Main St. (E) Harbor Park Dr. to Park Dr. (View 1)

2. Main St. (E) Harbor Park Dr. to Park Dr. (View 2)

3. Main St. (E) Park Dr. to Winter St. (View 1)

3. Main St. (E) Park Dr. to Winter St. (View 2)

4. Main St (E) Winter St. to Tillson Ave.

5-6. Main St (E) Tillson Ave. to parking lot entrance

7. Main St. (E) Parking lot entrance to Summer St.

8. Main St. (E) Summer St. to Talbot Ave.

9. Main St. (E) Talbot Ave. to Granite St.

10. Main St. (E) Granite St. to Willow St.

11. Main St. (E) Willow St. to Rankin St.

Table 18: Existing Sidewalk Condition Photographs (continued)

12. Main St. (E) Rankin St. to Cottage St. (View 1)

12. Main St. (E) Rankin St. to Cottage St. (View 2)

13. Main St. (W) Robinson St. to Pleasant St.

14. Main St. (W) Pleasant St. to Myrtle St.

15. Main St. (W) Myrtle St. to Park St.

16. Main St. (W) Park St. to Elm St.

17. Main St. (W) Elm St. to Museum St.

18. Main St. (W) Museum St. to School St.

19. Main St. (W) School St. to Limerock St.

20. Main St. (W) Limerock St. to Alleyway

21. Main St. (W) Alleyway to Lindsey St.

22. Main St. (W) Lindsey St. to Summer St.

Table 18: Existing Sidewalk Condition Photographs (continued)

23. Main St. (W) Summer St. to Talbot Ave.

24. Main St. (W) Talbot Ave. to Granite Street

27. Main St. (W) Rankin St. to North Main St.

28. Main St. (W) North Main St. to Cottage St.

33. Union St. (E) Oak St. to Elm St.

34. Union St. (E) Elm St. to Museum St.

35. Union St. (E) Museum St. to School St.

36. Union St. (E) School St. to Limerock St.

37. Union St. (E) Limerock St. to Lindsey St.

38. Union St. (E) Lindsey St. to Summer St.

39. Union St. (E) Summer St. to Talbot Ave.

40. Union St. (E) Talbot Ave. to Granite St.

Table 18: Existing Sidewalk Condition Photographs (continued)

41. Union St. (E) Granite St. to Willow St.

42. Union St. (E) Willow St. to Rankin St.

43. Union St. (W) Pleasant St. to Park St. (View 1)

43. Union St. (W) Pleasant St. to Park St. (View 2)

44. Union St. (W) Park St. to Grace St. (View 1)

44. Union St. (W) Park St. to Grace St. (View 2)

45. Union St. (W) Grace St. to Masonic St. (View 1)

45. Union St. (W) Grace St. to Masonic St. (View 2)

46. Union St. (W) Masonic St. to Limerock St.

47-52. Union St. (W) Limerock St. to Rankin St.

54. Pleasant St. (N)

56. Myrtle St. (N)

Table 18: Existing Sidewalk Condition Photographs (continued)

57. Park St. (S)

58. Park St. (N) (View 1)

58. Park St. (N) (View 2)

59. Orient St. (S)

60. Orient St. (N)

62. Oak St. (N)

63. Elm St. (S) (View 1)

63. Elm St. (S) (View 2)

64. Elm St. (N) (View 1)

64. Elm St. (N) (View 2)

65. Museum St. (S) (View 1)

65. Museum St. (S) (View 2)

Table 18: Existing Sidewalk Condition Photographs (continued)

66. Museum St. (N) (View 1)

66. Museum St. (N) (View 2)

66. Museum St. (N) (View 3)

67. School St. (S) (View 1)

67. School St. (S) (View 2)

68. School St. (N) (View 1)

68. School St. (N) (View 2)

69. Custom House Pl. (E)

70. Custom House Pl. (W)

71. Limerock St. (S)

72. Limerock St. (N)

74. Lindsey St. (N)

Table 18: Existing Sidewalk Condition Photographs (continued)

75. Summer St. (S)

77. Talbot Ave. (S)

79. Granite St. (S)

82. Willow St. (N)

83. Rankin St. (S)

84. Rankin St. (N)

86. Public Landing Road (N)

87. Park Drive (S) (View 1)

87. Park Drive (S) (View 2)

88. Park Drive (N)

90. Water Street (N)

99. Water St. (E)

Table 18: Existing Sidewalk Condition Photographs (continued)

100. Water St. (W) (View 1)

100. Water St. (W) (View 2)

101. Ocean St. (S) (View 1)

101. Ocean St. (S) (View 2)

102. Ocean St. (N)

6. STREETS

6.1 INTRODUCTION

During the fall of 2010, a street inventory and evaluation was completed for the Main Street/Downtown and Tillson Avenue/Waterfront areas. The focus of this study was to document existing conditions and to determine future pavement needs for the area. This report is limited to a presentation of visual observations of the pavement conditions, discussion of these observations, and pertinent remarks with regard to the performance of the pavements. No physical tests of the pavements, foundations, or patching materials were performed during this survey.

6.2 EXISTING CONDITIONS

A visual investigation of the pavement on Main Street, Union Street, Tillson Avenue, and surrounding side streets was completed. Figure 9 shows the location of each observed street section. The paved streets were observed for the presence of rutting, longitudinal cracks, horizontal cracks and alligator cracks. The width of each section of street was also recorded. Table 19 includes all of the recorded pavement condition data. Table 20 includes photographs of the observed streets.

All pavement was ranked based on the Maine Department of Transportation Pavement Condition Ratings (PCR). This system ranks pavement on a scale of 1-5. Pavement with a PCR of 1 or less is in poor to very poor condition, and is completely deteriorated with no salvage value; pavement with a PCR of 5 is considered to be excellent, is almost always new or nearly new, and is free of any cracks, patching, or rutting. The PCR values for each section of pavement within the study area are included in Table 19.

Main Street/Downtown

Pavement in the Main Street/Downtown area was observed to be in good condition. Main Street was split into 15 sections, delineated based on locations of side streets. The PCR values for Main Street ranged from 3 t o 3.5. There was minimal rutting on all of the Main Street sections; however there were minor longitudinal, alligator, and horizontal cracks on most of Main Street. Union Street was similarly split into 12 sections. There were minor longitudinal, alligator, and horizontal cracks on most of Union Street, minor rutting on much of Union Street, and a few sections of significant rutting. The PCR values ranged from 2.5 to 3.5.

The side streets between Main Street and Union Street were investigated separately. The PCR values ranged from 3, comparable to most of Main Street and Union Street, up to 5. Pleasant Street was observed to be in excellent condition. For the other side streets, there was minimal rutting and alligator cracking, but most of the streets had longitudinal and horizontal cracking.

Tillson Avenue/Waterfront

The Tillson Avenue/Waterfront area was in mostly good condition. The PCR values ranged from 3 to 4.5. Similar to the downtown side streets, there was minimal rutting and alligator cracking, but there was minor longitudinal and horizontal cracking on most of the observed streets.

6.3 RECOMMENDATIONS

In order to help prolong the life of the existing street pavement and to maximize the effectiveness of money spent, a pavement management system should be employed. We have outlined a number of different pavement management tools that can be employed below. Areas for which each type of treatment is applicable have been identified in Table 19 and are described in more detail below.

Crack Sealing

As part of a pavement management system, crack sealing can help to reduce pavement deterioration by restricting water penetration into underlying base and subbase layers. This restriction helps to maintain pavement structural capacity and limits future degradation. Simply stated, sealing cracks and joints in pavements extends the service life of the surface treatment and the pavement. Crack sealing will not improve initial pavement ride-ability however. Crack sealing is more effective than trying to fill cracks with additional pavement because the material used to crack seal is flexible.

It is recommended that crack sealing be done on Main Street, Union Street, side streets, and in the Tillson Avenue area, outside of the areas identified as part of the Tillson District and Waterfront Redevelopment Plan. The areas identified within the plan will be rebuilt when new roads are constructed as part of the new system of blocks. Approximately 20,000 linear feet of roadway are included in the area recommended for crack seal repair. A current approximate cost for crack sealing is $2 per linear foot of pavement to be sealed, resulting in a total cost of $40,000 for the entire area. A set yearly expenditure on crack sealing should be budgeted based on available funds. As an example, if $8,000 was budgeted on an annual basis (with an escalation factor), the repair of the entire area could be completed in five years.

Spot Repairs

In areas where there is more significant damage, crack sealing is not appropriate. When sections of roadway have alligator cracking, where the pieces of the cracked section have started to dislodge and the subbase materials become exposed, it is an appropriate time to complete a spot repair. In addition, areas with pot holes that currently require repair on a yearly basis are excellent candidates for spot repairs. In these instances, the pavement should be saw cut to remove the damaged section of and new asphalt installed. This type of repair should occur prior to the crack sealing of the surrounding pavement so that the joints surrounding the spot repairs can be sealed.

We would suggest that spot repairs be completed on many of the same roadways that have been identified to be crack sealed. Isolated cases of more severe alligator cracking requiring spot repair were observed on many of the roadways in the study area. The Public Works Department may also help identify roadways that require annual pothole repair. Roadways with PCR ratings 3 and below should be identified as candidates.

Spot repairs could be completed on the same five year schedule presented earlier as an example for crack sealing. Assuming that 2%-5% of the pavement surface requires spot repairing, the cost to the town would be $5,000 to $10,000 on an annual basis.

Maintenance Overlay

When the roadway ride-ability has become an issue due to minor rutting and the roadway appears to need a surface repair, however, there are no indications that there is any significant failure of the roadway subbase; a maintenance overlay can be used. This method of pavement repair consists of a thin section, or “shim”, of pavement that is placed over the existing pavement to provide a new wearing surface. This type of treatment should be identified early as it is not a small budgetary item.

Roadways identified as having a PCR value of below 3 should be examined for the possibility of an overlay. Geotechnical investigation work should be completed on those roadway sections to insure that the roadway subbase is sufficient and that it is not the cause of the pavement distress. The only roadways in the study area identified with PCR values below 3 are on Union Street, primarily at the northern end. A majority of the roadways in the study area are in good condition, and should not require an overlay at this time.

Mill and Fill

Similar to a maintenance overlay, "mill and fill" is a treatment method that provides a new wearing surface to the street. It differs from the maintenance overlay in that the existing pavement is removed by milling to a desired depth and new asphalt is placed. This type of treatment is used when pavement has reached the same condition of disrepair as pavement identified for a maintenance overlay. Mill and fill is also selected over a maintenance overlay in situations where curb reveal or roadway crown alterations are important.

Similar to the overlay treatment, roadways identified as having a PCR value of below 3 should be examined for the possibility of a mill and fill. Geotechnical investigation work should be completed on those roadways to insure that the roadway subbase is sufficient and that it is not the cause of the pavement distress.

Full Depth Reconstruction

Roadways which have had a failure of the subbase materials will require a full depth reconstruction. A full depth reconstruction involves the excavation of the existing pavement and subbase gravels, and new gravels and asphalt are installed. Often, storm drain improvements are made to the roadway at the same time. Typically, geotechnical investigation work occurs prior to this type of construction to determine the existing roadway subbase materials and help determine and any potential bedrock locations.

At this time, no roadways within the study area have been identified to be in need of a full depth reconstruction. New roadways are being proposed as part of the Redevelopment Plan and these would not be considered as part of a reconstruction effort.

Figure 9: Existing Street Infrastructure

Table 19: Existing Street Conditions

Location Number	Street Section	Width	Rutting	Longitudinal Cracks	Horizontal Cracks	Alligator Cracking	Rating	Comments/Repair Suggestions
	Main Street							
1	Main Street from Robinson Pl. to Pleasant St.	38'	No	Yes	Yes	Yes	3	Crack seal, spot repairs
2	Main Street from Pleasant St. to Myrtle St.	36'	No	Yes	Yes	Yes	3	Repair along curb line, crack seal
3	Main Street from Myrtle St. to Park St.	35'	Minor	Yes	Yes	Yes	3	Repair along curb line, crack seal
4	Main Street from Park St. to Elm St,	30'	No	Yes	Yes	Yes	3	Crack seal, spot repairs
5	Main Street from Elm St. to Museum St.	30'	No	Yes	No	Yes	3.5	Crack seal, spot repairs
6	Main Street from Museum St. to School St.	30'	No	Yes	Yes	Yes	3	Crack seal, spot repairs
7	Main Street from School St. to Limerock St.	29'	Yes	Yes	No	Yes	3	Crack seal, spot repairs
8	Main Street from Limerock St. to Lindsey St.	38'	No	Yes	No	Yes	3.5	Crack seal, spot repairs
9	Main Street from Lindsey St. to Summer St.	35'	No	Yes	Yes	Yes	3.5	Crack seal, spot repairs
10	Main Street from Summer St. to Talbot St.	34'	No	Yes	Yes	Yes	3	Crack seal, spot repairs
11	Main Street from Talbot St. to Granite St.	38'	No	Yes	Yes	Yes	3	Crack seal, spot repairs
12	Main Street from Granite St. to Willow St.	38'	No	Yes	Yes	Yes	3	Crack seal, spot repairs
13	Main Street from Willow St. to Rankin St.	35'	No	Yes	Yes	Yes	3.5	Crack seal, spot repairs
14	Main Street from Rankin St. to N. Main St.	57'	No	Yes	Yes	Yes	3	Crack seal, spot repairs
15	Main Street from N. Main St. to Cottage St.	38'	Minor	Yes	Yes	Yes	3	Crack seal, spot repairs
	Union Street							
16	Union Street from Pleasant St. to Myrtle St.	20'	No	Yes	Yes	No	3.5	Crack seal, spot repairs
17	Union Street from Myrtle St. to Park St.	28'	No	Yes	Yes	Yes	3.5	Crack seal, spot repairs
18	Union Street from Park St. to Elm St,	26'	Yes	Yes	Yes	Yes	3	Crack seal, spot repairs
19	Union Street from Elm St. to Museum St.	28'	Yes	Yes	Yes	Yes	3	Crack seal, spot repairs
20	Union Street from Museum St. to School St.	30'	Yes	Yes	Yes	Yes	3	Crack seal, spot repairs
21	Union Street from School St. to Limerock St.	32'	Yes	Yes	Yes	Yes	3.5	Crack seal, spot repairs
22	Union Street from Limerock St. to Lindsey St.	22'	Yes	Yes	Yes	Yes	3.5	Crack seal, spot repairs
23	Union Street from Lindsey St. to Summer St.	24'	Yes	Yes	Yes	Yes	2.5	Bad wheel ruts, maintenance overlay, crack seal
24	Union Street from Summer St. to Talbot St.	24'	Yes	Yes	Yes	Yes	3	Crack seal, spot repairs
25	Union Street from Talbot St. to Granite St.	24'	Yes	Yes	Yes	Yes	3	Crack seal, spot repairs
26	Union Street from Granite St. to Willow St.	24'	Yes	Yes	Yes	Yes	2.5	Bad wheel ruts, maintenance overlay, crack seal
27	Union Street from Willow St. to Rankin St.	24'	Yes	Yes	Yes	Yes	2.5	Bad wheel ruts, maintenance overlay, crack seal
	Side Streets Connecting Union Street and Main Street							
28	Pleasant Street from Main St. to Union St.	28'	No	No	No	No	5	Excellent condition
29	Myrtle Street from Main St. to Union St.	22'	No	Yes	Yes	No	3.5	Crack seal, spot repairs
30	Park Street from Main St. to Union St.	50'	No	Yes	Yes	No	3.5	Crack seal, spot repairs
31	Orient Street from Main St. to Union St.	23'	No	Yes	Yes	No	3.5	Crack seal, spot repairs
32	Oak Street from Main St. to Union St.	24'	No	Yes	Yes	No	4	Crack seal
33	Elm Street from Main St. to Union St.	24'	Yes	Yes	Yes	Yes	3	Crack seal, spot repairs
34	Museum Street from Main St. to Union St.	22'	Yes	Yes	Yes	No	3.5	Crack seal, spot repairs
35	School Street from Main St. to Union St.	24'	No	Yes	Yes	No	3.5	Crack seal, spot repairs
36	Custom House from Limerock St. to School St.	24'	No	Yes	Yes	No	4	Crack seal
37	Limerock Street from Main St. to Union St.	36'	No	Yes	Yes	Yes	3	Crack seal, spot repairs
38	Lindsey Street from Main St. to Union St.	25'	No	Yes	Yes	Yes	3.5	Crack seal, spot repairs

Table 19: Existing Street Conditions (Continued)

Location Number	Street Section	Width	Rutting	Longitudinal Cracks	Horizontal Cracks	Alligator Cracking	Rating	Comments/Repair Suggestions
40	Talbot Street from Main St. to Union St.	21'	No	Yes	Yes	No	3.5	Crack seal, spot repairs
41	Granite Street from Main St. to Union St.	22'	No	Yes	Yes	No	3.5	Crack seal, spot repairs
42	Willow Street from Main St. to Union St.	24'	No	Yes	Yes	Yes	3.5	Crack seal, spot repairs
43	Rankin Street from Main St. to Union St.	29'	No	Yes	Yes	No	3.5	Crack seal, spot repairs
	Tillson Avenue Area							
44	Public Landing Road from Main St. to Park Dr.	38'	No	Yes	Yes	No	3.5	Crack seal, spot repairs
45	Park Drive from Main St. to Public Landing Rd	40'	No	Yes	Yes	Yes	3.5	Crack seal, spot repairs
46	Park Drive from Public Landing Rd to Commercial St.	37'	No	Yes	Yes	Yes	3	Crack seal, spot repairs
47	Park Drive from Commercial St. to Tillson Ave.	32'	Yes	Yes	Yes	Yes	3	Crack seal, spot repairs
48	Winter Street from Main St. to Park Dr.	26'	No	Yes	Yes	No	3	Crack seal, spot repairs
49	Commercial Street from Park Dr. to Weeks St.	33'/22'	No	Yes	Yes	No	3.5	Crack seal, spot repairs
50	Tillson Avenue from Main St. to Park Dr.	75'/43'/26'	No	Yes	Yes	Yes	3.5	Crack seal, spot repairs
51	Tillson Avenue from Park Dr. to Weeks Dr.	31'/53'	No	Yes	Yes	No	3	Crack seal, spot repairs
52	Tillson Avenue from Weeks Dr. to End	30'	No	Yes	Yes	No	3.5	Crack seal, spot repairs
53	Lime Street from Lime St. Pl to Tillson Ave.	24'	No	No	No	No	3.5	Crack seal, spot repairs
54	Weeks Drive from Tillson Ave. to Commercial St.	28'	No	Yes	Yes	No	4.5	Crack seal
55	Lime Street Pl. from Lime St. to Wharf St.	22'	No	No	No	No	3.5	Crack seal, spot repairs
56	Sea Street Pl. from Lime St. Pl to Tillson Ave.	20'	No	Yes	Yes	No	4.5	Crack seal
57	Wharf Street from Lime St. Pl to Tillson Ave.	20'	No	No	Yes	No	4	Crack seal
	Water Street and Ocean Street							
58	Water Street from Main St. to Ocean St.	22'	Yes	Yes	No	No	4	Crack seal
59	Ocean Street from McLoud St. to Water St,	20'	No	Yes	No	No	4	Crack seal

Table 20: Existing Street Condition Photographs

1. Main St. (Robinson Pl. to Pleasant St.)

2. Main St. (Pleasant St. to Myrtle St.)

3. Main St. (Myrtle St. to Park St.)

4. Main St. (Park St. to Elm St.)

5. Main St. (Elm St. to Museum St.)

6. Main St. (Museum St. to School St.)

7. Main St. (School St. to Limerock St.)

8. Main St. (Limerock St. to Lindsey St.)

9. Main St. (Lindsey St. to Summer St.)

10. Main St. (Summer St. to Talbot St.)

11. Main St. (Talbot St. to Granite St.)

12. Main St. (Granite St. to Willow St.)

Table 20: Existing Street Condition Photographs (continued)

13. Main St. (Willow St. to Rankin St.)

14. Main St. (Rankin St. to N. Main St.)

15. Main St. (N. Main St. to Cottage St.)

16. Union St. (Pleasant St. to Myrtle St.)

17. Union St. (Myrtle St. to Park St.)

18. Union St. (Park St. to Elm St.)

19. Union St. (Elm St. to Museum St.)

20. Union St. (Museum St. to School St.)

21. Union St. (School St. to Limerock St.)

22. Union St. (Limerock St. to Lindsey St.)

23. Union St. (Lindsey St. to Summer St.)

24. Union St. (Summer St. to Talbot St.)

Table 20: Existing Street Condition Photographs (continued)

25. Union St. (Talbot St. to Granite St.)

26. Union St. (Granite St. to Willow St.)

27. Union St. (Willow St. to Rankin St.)

28. Pleasant St. (Main St. to Union St.)

29. Myrtle St. (Main St. to Union St.)

30. Park St. (Main St. to Union St.)

31. Orient St. (Main St. to Union St.)

32. Oak St. (Main St. to Union St.)

33. Elm St. (Main St. to Union St.)

34. Museum St. (Main St. to Union St.)

35. School St. (Main St. to Union St.)

36. Custom House (LImerock St. to School St.)

Table 20: Existing Street Condition Photographs (continued)

37. Limerock St. (Main St. to Union St.)

38. Lindsey St. (Main St. to Union St.)

39. Summer St. (Main St. to Union St.)

40. Talbot St. (Main St. to Union St.)

41. Granite St. (Main St. to Union St.)

42. Willow St. (Main St. to Union St.)

43. Rankin St. (Main St. to Union St.)

44. Public Landing Rd. (Main St. to Park Dr.) (View 1)

44. Public Landing Rd. (Main St. to Park Dr.) (View 2)

45. Park Dr. (Main St. to Public Landing Rd.)

46. Park Dr. (Public Landing Rd. to Commercial St.)

47. Park Dr. (Commercial St. to Tillson Ave.)

Table 20: Existing Street Condition Photographs (continued)

48. Winter St. (Main St. to Park Dr.)

49. Commercial St. (Park Dr. to Weeks St.)

50. Tillson Ave. (Main St. to Park Dr.) (View 1)

50. Tillson Ave. (Main St. to Park Dr.) (View 2)

51. Tillson Ave. (Park Dr. to Weeks St.)

52. Tillson Ave. (Weeks St. to End)

53. Lime St. (Tillson Ave. to Lime St. Pl.)

54. Weeks St. (Tillson Ave. to Lime St. Pl.)

55. Lime St. Pl. (Lime St. to Wharf St.)

56. Sea St. Pl. (Tillson Ave. to Lime St. Pl.)

57. Wharf St. (Tillson Ave. to Lime St. Pl.)

58. Water St. (Main St. to Ocean St.)

Table 20: Existing Street Condition Photographs (continued)

59. Ocean St. (McLoud St. to Water St.) (View 1)

59. Ocean St. (McLoud St. to Water St.) (View 2)

7. PRIVATE UTILITIES

7.1 INTRODUCTION

The Tillson Avenue area is currently serviced by private above ground utilities for electricity, communications, and cable. Utility upgrades and new installations will be necessary to facilitate the construction of new streets and the installation of service connections to implement the Redevelopment Plan. These connections can be facilitated with each utility at the time of final design.

7.2 CENTRAL MAINE POWER

Central Maine Power provides power transmission within the City of Rockland and has existing overhead electrical lines on Tillson Avenue, providing three-phase power for all of Tillson Avenue down to the Coast Guard base located at the end of the street. Despite our repeated requests for infrastructure mapping, Central Maine Power did not provide this data to us. Central Maine Power reported no recent upgrades, other than minor upgrades for customers within the area, and as of April 2010, Central Maine Power reports no major upgrades are currently planned for the area. The primary power transmission system consists of the overhead lines; however there are some secondary underground electrical (service connections) for customers in the Tillson Avenue area.

7.3 FAIRPOINT COMMUNICATIONS

Fairpoint Communications provides phone and high speed internet services within the City of Rockland and has existing aerial copper lines in the area, on utility poles owned by Central Maine Power. Despite our repeated requests for infrastructure mapping, Fairpoint Communications did not provide this data to us; requests for information were met with a response that cable plans for the area are proprietary. As of August 2009, Fairpoint Communications reports no current plans for upgrades in the Tillson Avenue Area. At the time of design for the upgrade of the area, the City should work directly with Fairpoint to determine the specific needs for changes and connections to new buildings.

7.4 TIME WARNER CABLE

Time Warner provides phone, cable television, and high speed internet services within the City of Rockland. Overhead cable lines run along Tillson Avenue, and extend down Park Drive and Winter Street in the Tillson Avenue study area on utility poles owned by Central Maine Power. Time Warner Cable recently upgraded their systems for the Rockland area, and as of November 2009, no additional upgrades are currently planned. Considering the proposed uses in the Tillson Avenue Area, additional line for cable service may be required on Lime Street, Weeks Street, and Commercial Street.

7.5 NATURAL GAS

There is no natural gas distribution system within the City of Rockland. The envisioned build-out of the redevelopment area will have significant heating and cooling loads, which could be served by natural gas as an alternative to electricity, heating oil, and propane. We recommend the City consider working with natural gas suppliers to evaluate the cost-benefit of this utility within the City and specifically within this redevelopment area.

7.6 RECOMMENDATIONS

In order to maximize the benefits of the redevelopment of the Tillson District and the view corridors that were taken into account in the proposed build-out, we recommend all power, cable, telephone, and internet infrastructure be located underground, within the sidewalks as illustrated in the street utility cross section.

8. PHASING/COST ESTIMATES

In order to help facilitate the 2010 Redevelopment Plan, we recommend the following construction phasing program.

The first phase in the redevelopment of the Tillson TIF District is to complete any land acquisition or land swaps necessary to construct the proposed municipal infrastructure. Engineered plans, based on current planimetric and boundary survey, depicting future road layout, right-of-way limits and all other pertinent information would be necessary to finalize boundaries. These plans can be developed as part of the negotiations with the land owners.

The second phase is to construct the new city streets and install the utility infrastructure within the right-of-way. A complete survey of existing infrastructure will be required to determine the connection requirements between existing and proposed utilities. We recommend new infrastructure be limited to sanitary sewer, stormwater, water, and conduit duct banks and manholes for private electrical-telecomm utilities. These basic utilities would be required prior to the start of building construction and to facilitate the economic development process. We also recommend roadways be constructed during this phase, from curb-line to curb-line but stopping short of installing curbs and surface course pavement.

The third phase is the private investment and construction of the new buildings and surrounding public and joint public-private amenities. During this phase, new buildings would be immediately tied into the new infrastructure. As part of the third phase, we recommend the curbing, new sidewalks, and street amenities such as trees, benches, lighting, etc. be installed throughout the blocks surrounding the new buildings. We anticipate this work would occur block by block as development occurs. We recommend new sidewalks on the existing, surrounding streets leading to Main Street be constructed at this time, to create connectivity within the downtown area. As a final step, all new and reconstructed roadways would receive surface pavement.

In order to help the City plan for the implementation of this Infrastructure Plan, we have developed preliminary cost estimates, prototypical road cross section, and standard details to use as guidance .The cost estimates have been developed using linear foot prices for the various elements of the development and are broken into the anticipated phases, as described above.

COMMITMENT & INTEGRITY
DRIVE RESULTS

TILLSON AVENUE TIF DISTRICT - BLOCK CONSTRUCTION

ENGINEER'S ESTIMATE OF PROBABLE CONSTRUCTION COST AT SCHEMATIC DESIGN

General Assumptions and References:

- Estimate based on Schematic 2010 Tillson District Redevelopment Plan
- Linear foot costs estimated using unit prices from "Item Unit Bid Price Averages Based on Contracts Awarded from 01/09/2005 to 01/09/2008 provided by MDOT and recent bid tabulations received for road/sewer projects.
- Escalation factor represents an estimated cost of inflation and increases in construction cost from 2010
- Escalation factor determined from Engineering News-Record Construction Cost Index (3.2%/yr)

Phase 1

It is anticipated that Phase 1 would involve land acquisition/swaps to facilitate the proposed build-out scenario

Affected Properties	Current Assessed Values	
8 Lime Street	$	143,000
65 Tillson	$	775,000
78 Tillson Avenue	$	155,000
1 Commercial Street	$	650,000
9 Commercial Street	$	45,000
11 Commercial Street	$	216,000
17 Commercial Street	$	350,000

Current mil rate for the City of Rockland is $17.20/$1000 of assessed value

Phase 2

Phase 2 involves the installation of utilities in the proposed street network and base pavement

	Quantity	Unit	Unit Cost		Price
Streets					
Interior Streets	1,850	LF	$ 130	$	240,500
32' width; cross section includes 1' common borrow, 18" Type D gravel; 3" Type A gravel; and 2" 19mm HMA binder					
Perimeter Streets	1,800	LF	$ 155	$	279,000
38' width; cross section includes 1' common borrow, 18" Type D gravel; 3" Type A gravel; and 2" 19mm HMA binder					
Utilities					
Relocate 12" force main	300	LF	$ 120	$	36,000
Includes pipe and sewer manholes					
Relocate 36" treatment plant outfall	300	LF	$ 200	$	60,000
Includes pipe and drain manholes					
Water	2,000	LF	$ 120	$	240,000
Includes pipe and hydrants					
Sanitary Sewer	2,500	LF	$ 75	$	187,500
Includes pipe and sewer manholes					
Storm Sewer	1,850	LF	$ 115	$	212,750
Includes pipe, catch basins, and drain manholes					
Elec./Comm Duct Bank	3,750	LF	$ 150	$	562,500
Includes four 2" pvc pipes in all sidewalks					
			Phase 2 Subtotal	**$**	**1,818,250**
			Construction Contingency (25%)	**$**	**454,600**
			Escalation 5 year projection (16%)	**$**	**363,700**
			Engineering/Permitting (10%)	**$**	**263,700**
			Phase 2 Total	**$**	**2,900,250**

COMMITMENT & INTEGRITY
DRIVE RESULTS

Phase 3

Phase 3 is the construction of the new buildings for the proposed blocks

Building construction was not estimated as part of this plan, and will vary depending on final uses and building designs.

Phase 4

Phase 4 would occur during/after Phase 3, the construction of the new buildings

	Quantity	Unit	Unit Cost		Price
Streets					
Interior	1850	LF	$ 26	$	48,100
32' width; 1.5" 12.5 mm HMA surface					
Perimeter	1,800	LF	$ 31	$	55,800
38' width; 1.5" 12.5 mm HMA surface					
Sidewalks					
Proposed Tillson Redevelopment Blocks	3750	LF	$ 325	$	1,218,750
14' width; cross section includes 1' Type D gravel and concrete surface; Type 1 granite curb; handicap ramps at bumpouts; trees every 40', lights every 40'					
Additional Sidewalk on Connecting Streets	3600		$ 325	$	1,170,000
14' width; cross section includes 1' Type D gravel and concrete surface; Type 1 granite curb; handicap ramps at bumpouts; trees every 40'; lights every 40'					
Additional Sidewalk on Park Street	800		$ 310	$	248,000
14' width; cross section includes 1' Type D gravel and concrete surface; Type 1 granite curb; handicap ramps at bumpouts; lights every 40'					
Stormwater Treatment	3,650	Lf	$ 48	$	175,200
Accomplished using approximately seven tree box filters throughout the redevelopment area					
			Phase 4 Subtotal	**$**	**2,915,850**
			Construction Contingency (25%)	**$**	**729,000**
			Escalation 7 year projection(22.4%)	**$**	**816,500**
			Engineering/Permitting (10%)	**$**	**446,200**
			Phase 4 Total	**$**	**4,907,550**

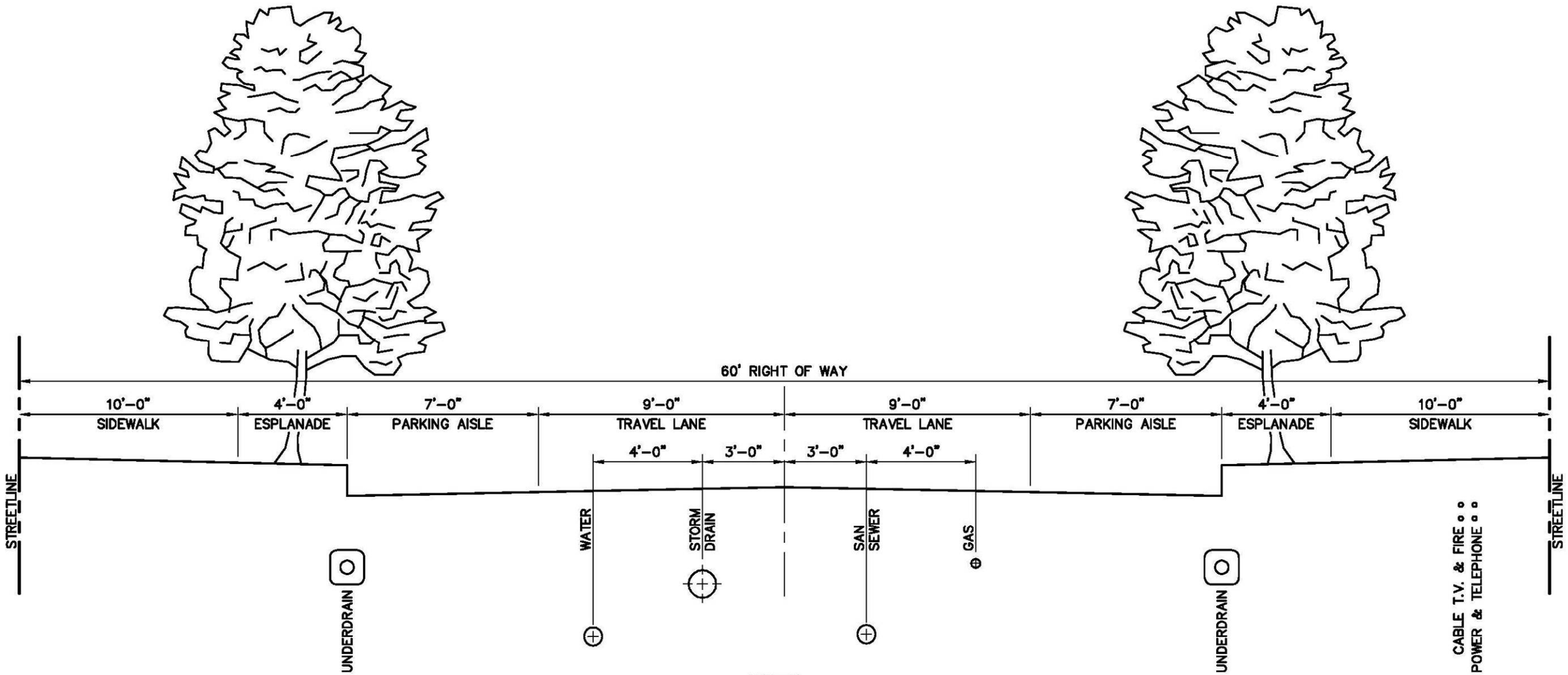

NOTES:

1. POWER, TELEPHONE AND CABLE T.V. SHALL NOT BE PLACED LESS THAN 30 INCHES DEEP.
2. DEPTH OF SANITARY SEWER AND STORM DRAIN AS PER RECOMMENDATION OF THE CITY ENGINEER.
3. DEPTH OF THE OTHER UTILITIES AS PER RECOMMENDATION OF APPLICABLE UTILITY COMPANY.
4. PERIMETER STREETS: TRAVEL LANES SHALL BE 10' AND PARKING AISLE SHALL BE 9'. STREET R.O.W. WILL INCREASE TO 66'.

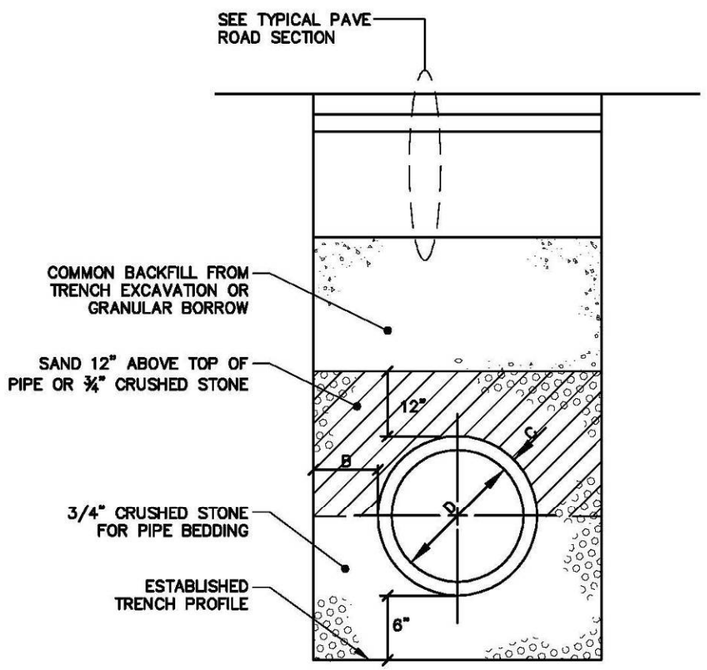

PIPE INSTALLATION DETAIL

N.T.S.

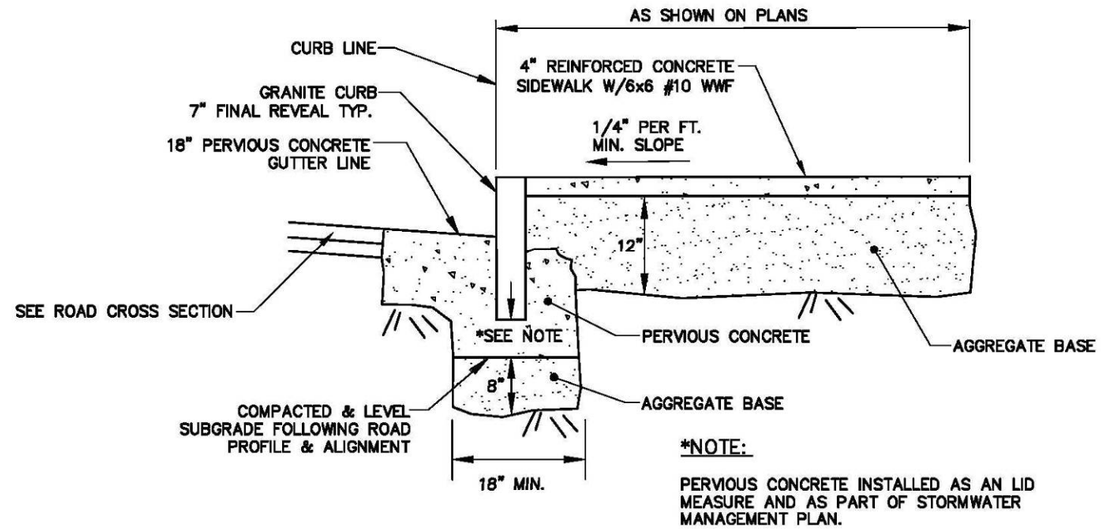

*NOTE:

PERVIOUS CONCRETE INSTALLED AS AN LID MEASURE AND AS PART OF STORMWATER MANAGEMENT PLAN.

CONCRETE SIDEWALK AND GRANITE CURB INSTALLATION

N.T.S.

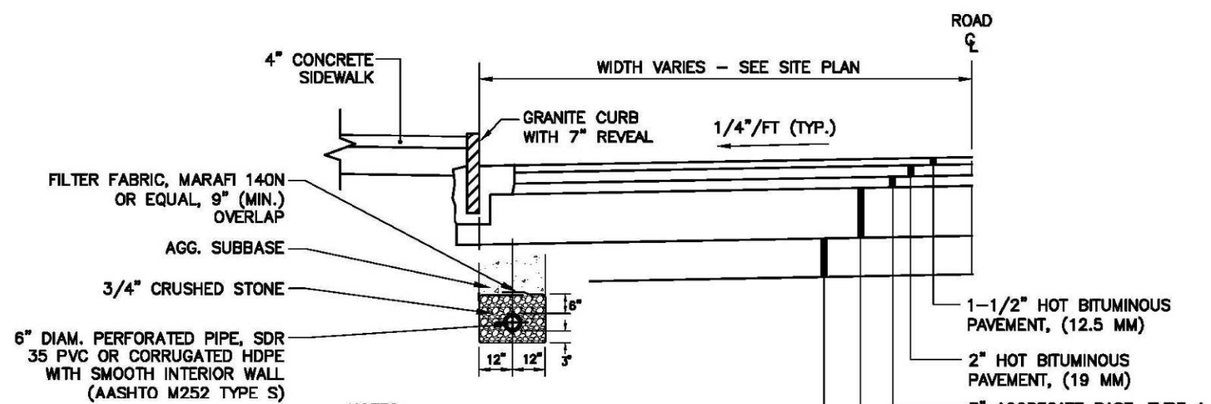

NOTES:

1. UNDERDRAIN PIPE INVERT ELEVATIONS SHALL BE AT LEAST 42 INCHES BELOW GUTTER GRADES.
2. PERFORATIONS IN UNDERDRAIN PIPE SHALL BE ORIENTED DOWN.

TYPICAL PAVED ROAD SECTION

N.T.S.

NOTE: AGGREGATE TYPES PER MDOT SECTION 304.02